FLUID COMPONENTS INTERNATIONAL LLC

Installation, Operation & Maintenance Manual

Installation, Betrieb und Wartungshandbuch

Manual de Instalación, Operación y Mantenimiento

安装、操作和维护手册

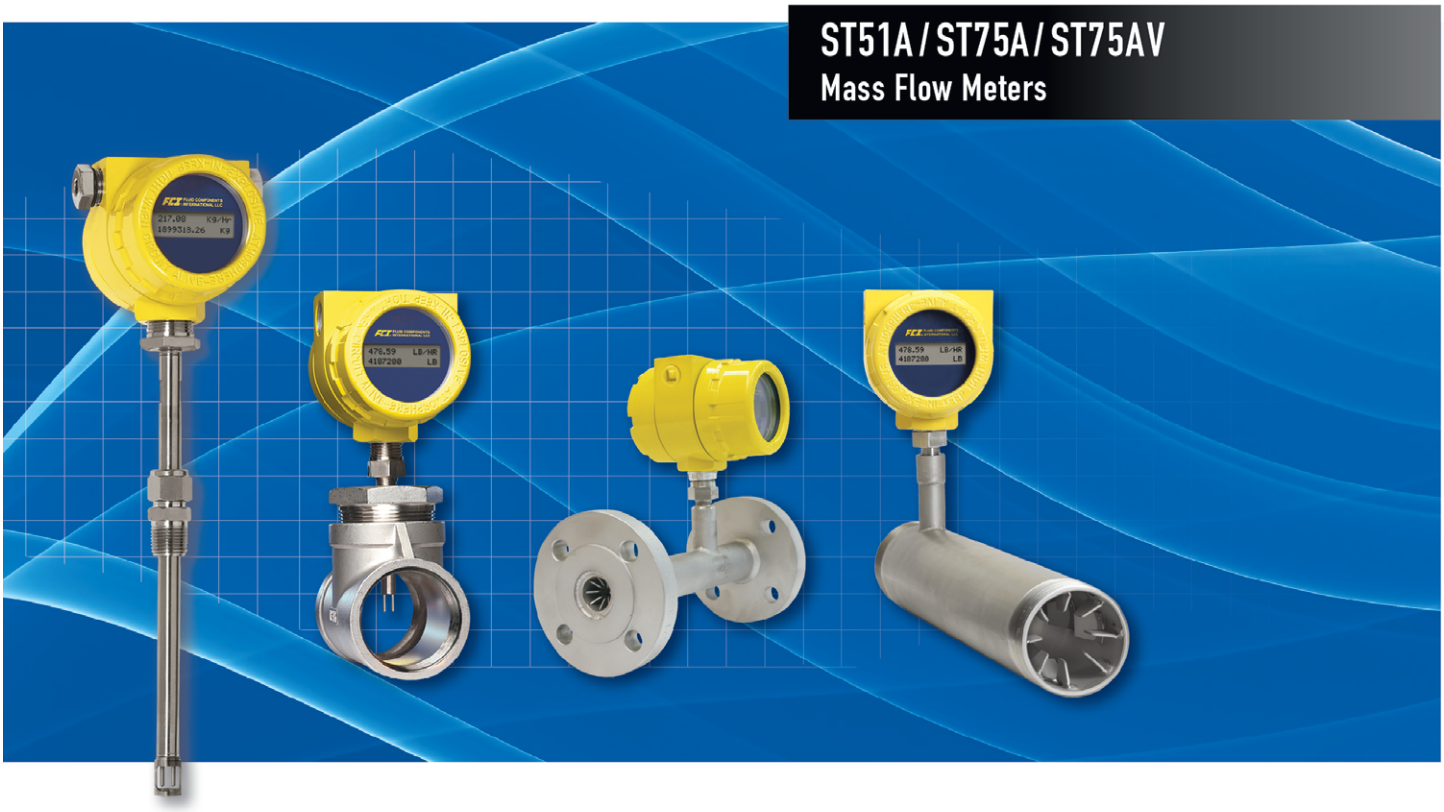

HART COMMUNICATION PROTOCOL

Fluid Components International LLC (FCI). All rights reserved.

Doc. No. 06EN003426 Rev. A

Notice of Proprietary Rights

This document contains confidential technical data, including trade secrets and proprietary information which is the property of Fluid Components International LLC (FCI).Disclosure of this data to you is expressly conditioned upon your assent that its use is limited to use within your company only (and does not include manufacture or processing uses). Any other use is strictly prohibited without the prior written consent of FCI.

© Copyright 2016 by Fluid Components International LLC. All rights reserved. FCI is a registered trademark of Fluid Components International LLC. Information subject to change without notice.

Table of Contents

Table of Contents iii
List of Figures vi
List of Tables vii
1 GENERAL 1
Product Description 1
Theory of Operation 1
Safety Instructions 1
Order Verification 1
Hardware – Model Descriptions 2
Optional Accessories 2
Specifications 3
2 INSTALLATION 5
Instrument Identification and Outline Dimensions 5
Pre-Installation 5
Serial Number 5
Flow Direction Alignment 5
Recommended Straight Run 7
Installing ST51A Flow Element 7
Compression Fitting Mounting 8
Installing ST75A/ST75AV Flow Element 9
Pipe Tee Installation 9
Tube Tee Installation 9
NPT Flow Tube Installation 9
Flanged Installation 9
Re-positioning the Display 9
Installing the Remote Flow Meter System 10
Remote Cable 11
Local Enclosure 12
Remote Enclosure 13
Instrument Wiring 15
Accessing the Interface Board Connection Terminals 16
ESD Precautions 16
Power Connections 17
Onboard Power ON LED Indicator 17
Power Fuse Replacement 17
Signal Connections 19
4-20 mA Analog Outputs 19
HART Connections 19
Pulse Output and Alarm (Source/Sink) 20

Serial Interface Connector J9 21
3 OPERATION 23
Overview 23
Instrument Configuration and Setup Using the Service Port (RS-232) 23
Main Menu 24
Top Level Menu Commands 24
Secondary Commands: CLI 24
Start-up and Commissioning 24
Z Menu: Configure Flow Units and 4-20 mA Output Scaling 25
Changing Flow Units, Example 26
V Menu: Configure Outputs (4-20 mA and Digital Outputs) 26
4-20 mA Configuration 28
Flow/Temperature Assignment 28
NAMUR Mode 28
HART Damping Value 28
Source/Sink Output Configuration 28
Source/Sink Output Functions 28
Source/Sink Output Programming Parameters 28
Serial Interface Command Reference 29
Top Level Menu Commands 29
CLI Commands 30
HART Operation 32
Process Data Operation 32
ST51A/ST75A/ST75AV HART Process Data Organization 32
ST51A/ST75A/ST75AV Process Variable Slots 32
Primary Variable Classifications 32
Device Description Files 32
EDDL Files 33
Loading the DD Files to the 475 Field Communicator 33
Service Data Operation 33
HART Command List Reference 36
ST51A/ST75A/ST75AV HART Universal Commands 36
ST51A/ST75A/ST75AV HART Common Practice Commands 44
ST51A/ST75A/ST75AV HART Device Specific Commands 47
HART Command Bit Assignments 52
Command Status Bytes 52
Command 48, Additional Device Status Bytes 53
HART Engineering Units Codes 54

4 MAINTENANCE 55
Calibration 55
Electrical Connections 55
Remote Enclosure 55
Electrical Wiring 55
Flow Element Connections 55
Flow Element Assembly 55
5 TROUBLESHOOTING 57
Application Verification 57
Equipment Needed 57
Check Serial Numbers 57
Check the Instrument Installation 57
Check for Moisture 57
Check Application Design Requirements 57
Verify Standard Versus Actual Process Conditions 57
Verifying Calibration Parameters (Diagnostics) 58
Hardware Verification 59
Fuse Check 59
Sensor Check 59
Transmitter Circuit Calibration Check (Delta R Verification) 60
References 60
Equipment 60
Procedure 60
APPENDIX A DRAWINGS 63
APPENDIX B GLOSSARY 81
Abbreviations 81
Definitions 81
APPENDIX C APPROVAL INFORMATION 83
EU Information 83
Specific Conditions of Use per FM16ATEX0008X 84
APPENDIX D CUSTOMER SERVICE 89
Customer Service/Technical Support 89
Warranty Repairs or Returns 89
Non-Warranty Repairs or Returns 89
Extended Warranty 89
Return to Stock Equipment 89
Field Service Procedures 90
Field Service Rates 90

List of Figures

Figure 1 – Probe Serial Number, Reference Flat and Flow Direction Mark 5
Figure 2 – Serial Number Location on DC Interface Board (Blind Cover Removed) 6
Figure 3 – ST51A Flow Arrow Alignment 6
Figure 4 – Recommended Straight Run (ST75A Shown) 7
Figure 5 – Flow Element Installation, ST51A 8
Figure 6 – Display Re-positioning 10
Figure 7 – Typical Remote Flow Meter System (ST51A with ½" NPT Cable Port Shown) 10
Figure 8 –Remote Cable, Interconnecting 11
Figure 9 – Remote Cable Installation, Local Enclosure 12
Figure 10 – Local Enclosure Remote Cable Wiring 12
Figure 11 – Remote Cable/Bracket Installation, Remote Enclosure 14
Figure 12 – Remote Enclosure Interface Board Connector J4 Detail (AC Version Shown) 14
Figure 13 – ST51A/ST75A/ST75AV Wiring Access 15
Figure 14 – Recommended Wire Routing/Internal Ground Screw 16
Figure 15 – Power and Signal Wiring Terminals 17
Figure 16 – Input Power Fuse Locations 18
Figure 17 – Single Connection and Multidrop HART Setups 19
Figure 18 – Sink Output 20
Figure 19 – Source Output 20
Figure 20 – RJ12 Serial Adapter Installed on Flow Meter J9 Header Connector 21
Figure 21 – Block Diagram: Flow Meter Serial Port Connections, FC88 and Computer 22
Figure 22 – Z Menu Command Structure: Units and Scaling Setup 25
Figure 23 – V Menu Command Structure: Output Configuration Setup 27
Figure 24 – Field Communicator Easy Upgrade Utility, Import DD 33
Figure 25 – Reference and Active Sensor Resistance Check (AC Version Shown) 59
Figure 26 – Transmitter Circuit Calibration Diagram 61
Figure 27 – Basic Instrument Assembly: ST51A, ST75A and ST75AV 64

List of Tables

Table 1 – Optional Accessories 2
Table 2 – Compression Fitting Material 8
Table 3 – Power and Signal Wiring Summary 18
Table 4 – Serial Port J9 Pinout 21
Table 5 – Serial (COM) Port Configuration 23
Table 6 – Typical Serial Interface Top Level Commands for Flow Meter Configuration 25
Table 7 – Flow Unit Example 26
Table 8 – Top Level Menu Commands 29
Table 9 – List of CLI Commands 30
Table 10 – ST51A/ST75A/ST75AV HART Process Variables 32
Table 11 – ST51A/ST75A/ST75AV HART Device Registration Information 33
Table 12 – HART Universal Commands 36
Table 13 – HART Common Practice Commands 44
Table 14 – HART Device Specific Commands 47
Table 15 – Command Status Bytes, Bit Assignments 52
Table 16 – Command 48, Additional Device Status Bytes Bit Assignments 53
Table 17 – HART Engineering Units Codes 54
Table 18 – Diagnostic Test Sequence 58
Table 19 – Appendix A, List of Drawings 63

This Page Intentionally Left Blank

1 GENERAL

Product Description

The ST51A and ST75A/ST75AV Series are thermal dispersion, industrial process grade air/gas flow meters. They are suitable for all air and gas flow measurement applications. The ST51A is an insertion type flow meter for line sizes ranging from 2" to 24" [51 to 610 mm]. The ST75A is an in-line type flow meter for line sizes ranging from ¼" to 2" [6 mm to 51 mm]. Both ST51A and ST75A/ST75AV flow meters provide direct mass flow measuring and measures flow rate, totalized flow and temperature.

The measurements are made available to the user through dual 4-20 mA analog output channels, a separate source and sink channel (pulse output for totalizer or level output for alarm) and HART. The optional alphanumeric LCD display provides real-time process variable values, flow range and process description information. There are no moving parts to clean or maintain. These flow meters are offered in a wide selection of process connections to fit with any process piping and versions are available for temperature service from -0 °F [-18 °C] to 350 °F [177 °C].

ST51A and ST75A/ST75AV's electronics/transmitter can be integrally mounted with the flow sensor or remote mounted up to 100' [30 m] from the sensor element. All ST51A and ST75A/ST75AV flow meters are precision calibrated in FCI's world-class, NIST traceable calibration facility on one of our flow stands matched to the customer's gas application and actual installation conditions.

Theory of Operation

The instrument is functionally based on the thermal dispersion operating principal. A low powered heater produces a temperature differential (ΔT) between two Resistance Temperature Detectors (RTDs) by heating one of the RTDs above process temperature. As the process mass flow rate increases, the temperature differential (ΔT) between the RTDs decreases. The ΔT between the RTDs is proportional to the process mass flow. The flow transmitter converts the RTD's ΔT signal into a scaled flow output signal. The signal from the unheated RTD is used to provide the process temperature value.

Safety Instructions

Warning: Explosion Hazard. Do not disconnect equipment when flammable or combustible atmosphere is present.

- Field wiring shall be in accordance with NEC (ANSI-NFPA 70) for Division 2 hazardous locations and CEC (CSA C22.1) for division 2 locations as applicable.
- The instrument must be installed, commissioned and maintained by qualified personnel trained in process automation and control instrumentation. The installation personnel must ensure the instrument has been wired correctly according to the applicable wiring diagram.
- All location specific installation and wiring requirements (i.e., local electrical codes) must be met and maintained. Install an input power circuit breaker or power disconnect switch and fuse near the flow meter to interrupt power during installation and maintenance. A switch or circuit breaker is required if installation is in a hazardous area.
- The flow meter contains electrostatic discharge (ESD) sensitive devices. Use standard ESD precautions when handling the circuit board assemblies.
- Hazardous Areas: The instrument is designed for use in hazardous areas. The approved area classification is identified on the nameplate along with the temperature and pressure limitations. See Agency Approvals, page 3 and APPENDIX C, page 83 for a complete listing of the instrument's safety/hazardous areas approvals.

Order Verification

- Verify the received hardware matches the purchased hardware and application requirements. Verify the model number and part number on the instrument I.D. tag matches the purchased model number part number.
- Review the calibration requirements as specified on the Engineering Data Sheet in the documentation package. Verify the flow, temperature and pressure limits meet the application requirements.

Hardware – Model Descriptions

ST51A – Single point insertion element with flow and temperature process output

ST75A – In-line element with flow and temperature process output

ST75AV – Vortab In-line element with flow and temperature process output

Optional Accessories

Table 1 – Optional Accessories

Part Number	Description
FC88	Portable Hand-held Communicator
014108-03	PC Interface Communications Kit, for RS-232 serial port connection

Specifications

Instrument

- **Media Compatibility**

  ST51A: Air, compressed air, nitrogen, biogas, digester gas, methane, natural gas

  ST75A/ST75AV: Air, compressed air, nitrogen, oxygen, argon, CO2, other inert gases, natural gas and other gases as identified in the Order Information Sheet (OIS)

- **Pipe/Line Size Compatibility**

  ST51A: 2" to 24" [51 mm to 610 mm]

  ST75A/ST75AV: ¼" to 2" [6 mm to 51 mm]

- **ST51A Flow Range**

  0.3 SFPS to 400 SFPS [0.08 MPS to 122 MPS]

- **ST75A/ST75AV Flow Range***

NPT Line Size	¼"	½"	¾"	1"	1 ½"	2"
Min SCFM	0.04	0.13	0.22	0.35	0.85	1.40
Min [NCMH]	[0.07]	[0.22]	[0.38]	[0.59]	[1.44]	[2.38]
Max SCFM	17.34	50.64	88.88	139.95	539.31	559.27
Max [NCMH]	[29.47]	[86.04]	[151.00]	[237.78]	[576.48]	[950.20]

Tubing Line Size	¼"	½"	1"
Min SCFM	0.01	0.05	0.25
Min [NCMH]	[0.01]	[0.09]	[0.42]
Max SCFM	3.02	21.15	99.08
Max NCMH	[5.14]	[35.94]	[168.33]

** Range subject to gas type and conditions*

- **Accuracy**

  ST51A/ST75A: Standard: ±2% reading ±0.5% full scale
  Optional: ±1% reading ±0.5% full scale

  ST75AV: ±1% reading ±0.5% full scale

- **Repeatability**

  ±0.5% of reading

- **Temperature Compensation**

  Standard: 40 to 100 °F [4 to 38 °C]

  Optional: 0 to 250 °F [-18 to 121 °C]

- **Turndown Ratio**

  3:1 to 100:1

- **Agency Approvals**

  CE Mark

  Directive 2014/34/EU ATEX
  IECEx Scheme

  ATEX/IECEx: II 2 G Ex db IIC T6...T1 Gb
  II 2 D Ex tb IIIC T85°C...T300°C Db; IP66/IP67
  Ta = -40°C to +65°C

  FM, FMc: Class I, Div 1, Groups B, C, D
  Class I, Div 2, Groups A, B, C, D
  Class II/III Div 1, Groups E, F, G
  Type 4X, IP66

  Directive 2014/30/EU Electromagnetic Compatibility EMC

  Directive 2014/35/EU Low Voltage

  Directive 2011/65/EU RoHS 2

  FM, FMc

  Explosion-proof: Class I, Div. 1, Groups B, C, D

  Dust-ignitionproof: Class II/III, Div. 1, Groups E, F, G; Type 4X; IP66

  Nonincendive: Class I, Div. 2, Groups A, B, C, D

  SIL 1 compliant; Safe Failure Fraction (SFF) 78.5% to 81.1%

  CRN No.: 0F0303

  Contact FCI for other approvals and conditions of use.

- **Warranty**

  2 years

Flow Element

- **Type**

  Thermal dispersion

- **Material of Construction**

  ST51A: 316L stainless steel body with Hastelloy-C22 thermowells; 316 stainless steel compression fitting with Teflon or stainless steel ferrule.

  ST75A/ST75AV: All-welded 316 stainless steel probe element with Hastelloy-C22 thermowells; 316 stainless steel NPT, flange and tube fittings.

- **Process Connection**

  ST51A: ½" Male NPT or ¾" Male NPT compression fitting with stainless steel or Teflon ferrule

  Insertion Length:

  1" to 6" [25 mm to 152 mm]

  1" to 12" [25 mm to 305 mm]

  1" to 18" [25 mm to 457 mm]

  ST75A: T-fitting [Female NPT]: ¼", ½", ¾", 1", 1-½" or 2"

  Tubing: ¼", ½", 1"

  ST75AV: Female NPT, Male NPT

  Flange: ¼", ½", ¾", 1", 1-½" or 2"

- **Maximum Operating Pressure**

  ST51A stainless steel ferrule: 500 PSIG [34 bar(g)]

  Teflon ferrule: 150 PSIG [10 bar(g)]

  ST75A: T-fitting [Female NPT]: 240 PSIG [16.5 bar(g)]

  Tube: 600 PSIG [41 bar(g)]

  ST75AV: 600 PSIG [41 bar(g)]

- **Flow Element Temp Range**

  ST51A stainless steel ferrule: 0 °F to 350 °F [-18 °C to 177 °C]

  ST75A: 0 °F to 250 °F [-18 °C to 121 °C]

  Teflon ferrule: 0 °F to 200 °F [-18 °C to 93 °C]

Flow Transmitter

- **Enclosure**

  Rating: NEMA 4X [IP67]

  Material: Standard – Aluminum, polyester powder-coated
  Optional – 316 stainless steel

  Conduit/Cable port: Dual ½" female NPT or M20x1.5

- **Operating Temperature**

  0 °F to 140 °F [-18 °C to 60 °C]

- **Maximum Relative Humidity**

  100%

- **Maximum Altitude**

  12,000 feet (3,658 meters)

- **Input Power**

  DC: 18 VDC to 36 VDC

  AC: 85 VAC to 265 VAC (4.5 Watts max.; CE Mark voltage 100 VAC to 240 VAC)

  Instrument (Element + Sensor): 4.5 Watts

  Sensor only: 0.30 Watts

- **Analog Output Signals**

  Two 4-20 mA outputs, configured to flow rate and/or temperature. Typical load: 250 Ω; Max load: 500 Ω. Both outputs have fault indication per NAMUR NE43 guidelines, user selectable for high (> 21.0 mA) or low (< 3.6 mA).

- **Source/Sink Outputs**

  One *source* output and one *sink* output provides totalized flow (pulse signal) or alarm setpoint (level signal). Pulse width at 50% duty cycle. 1-500 Hz pulse output for total flow.

  - Source: 22 ±2 VDC, 25 mA
  - Sink: External (user) power source and load not to exceed 40 VDC and 150 mA

- **Communication Port**

  - RS-232C, standard
  - HART, standard

- **Digital Display**[1]

  Two-line x 16 character LCD; displays measured value and engineering units. Top line assigned to flow rate, second line user assignable to temperature reading, flow totalizer or alternating. Display can be rotated in 90° increments for optimum viewing orientation.

  [1] *Display "delete" option (Blind, no display window) also available.*

- **Input Power Fuse**

Part No.	Type	Amp Code	Ampere Rating	Max. Voltage Rating
Littelfuse Series 454: 045401.5	Slo-Blo	01.5	1.50 A	125 V

Refer to Power Fuse Replacement on page 17 for fuse replacement instructions.

- **Installation and Mounting**

  ST51A – Integral with sensor element or remote mountable with interconnecting cable length of: 10' [3 m), 25' [7.6 m], 50' [15 m], 100' [30 m] or custom length.

  ST75A/ST75AV – In-line "T", NPT or tube. Available in remote mountable configuration with interconnecting cable length of: 10' [3 m), 25' [7.6 m], 50' [15 m], 100' [30 m] or custom length.

2 INSTALLATION

Warning: The ambient temperature range and applicable temperature class of the ST51A and ST75A/ST75AV Series flow meters are based on the maximum process temperature for the particular application as follows; T6 for -40 °C ≤ Ta ≤ +55 °C; T3 for -40 °C ≤ Ta ≤ +65 °C.

Instrument Identification and Outline Dimensions

Appendix A provides outline dimensions and mounting bracket dimensions for all integral and remote mounted electronic configurations. Verify all dimensions meet the application requirements before beginning installation.

Pre-Installation

Serial Number

The ST51A, ST75A and ST75AV (Vortab) flow meters can be specified with integral or remote electronics. The flow element has a serial number etched into the side of the extension pipe (ST51A) or HEX (ST75A/ST75AV) as shown in Figure 1 below. The tag on the enclosure includes serial number and model number. The transmitter circuit card (DC version, Interface board) has a serial number noted on the board as shown on Figure 2. The flow sensor and transmitter circuit have been calibrated as a matched set and should be paired together unless approved by an FCI technician.

Flow Direction Alignment

All sensor elements have a flow arrow indicator marked on the element assembly at the reference flat, which indicates the flow direction for which the flow element has been calibrated. Install the instrument with the flow arrow facing in the same direction as flow in the pipe stream as shown in Figure 3 and Figure 4. The ST75A/ST75AV flow element has been calibrated directly in the pipe tee or tube tee for orientation and insertion depth, as shown on Figure 4. See APPENDIX A, page 63 for orientation details.

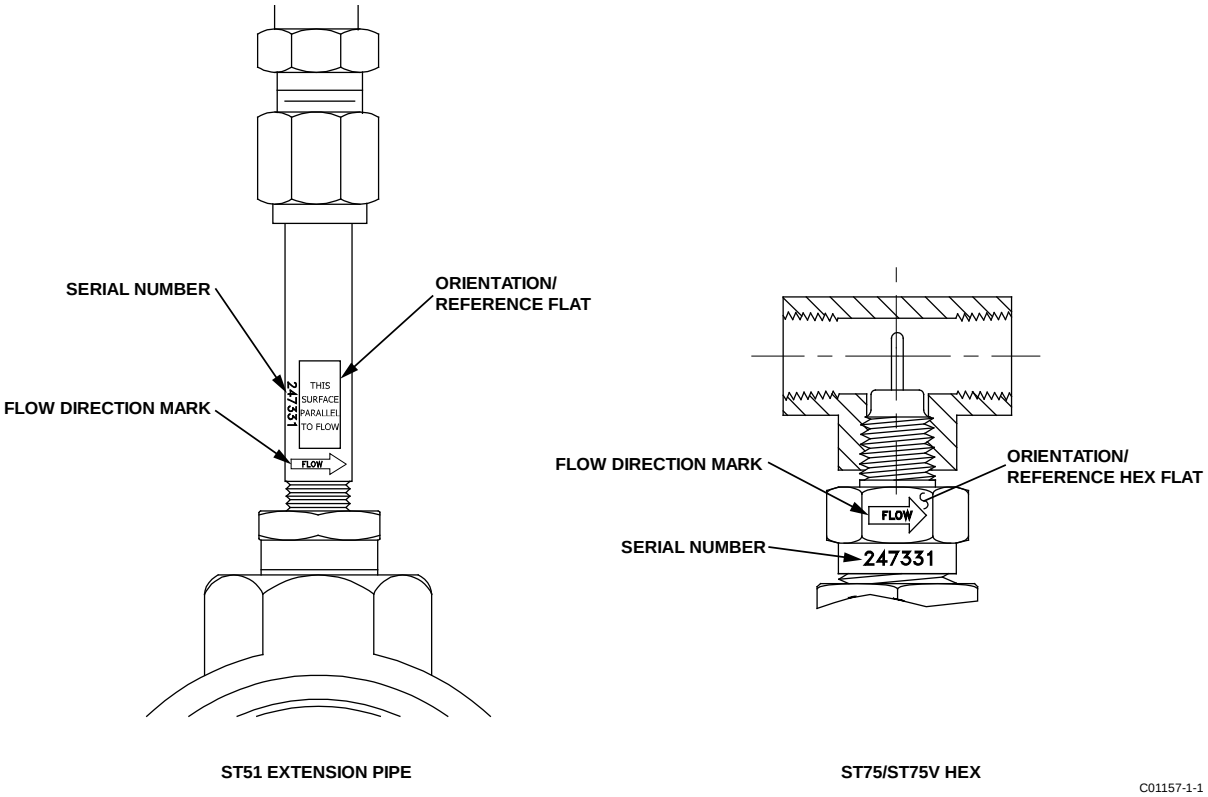

Figure 1 – Probe Serial Number, Reference Flat and Flow Direction Mark

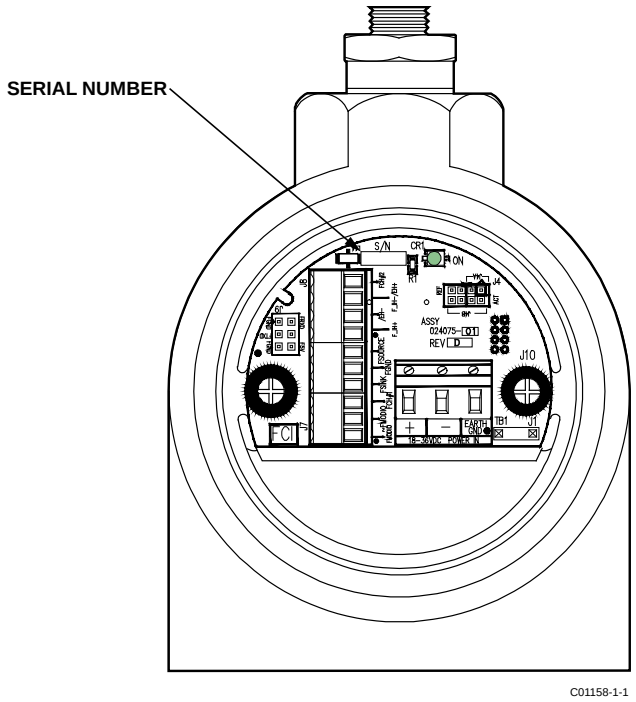

Figure 2 – Serial Number Location on DC Interface Board (Blind Cover Removed)

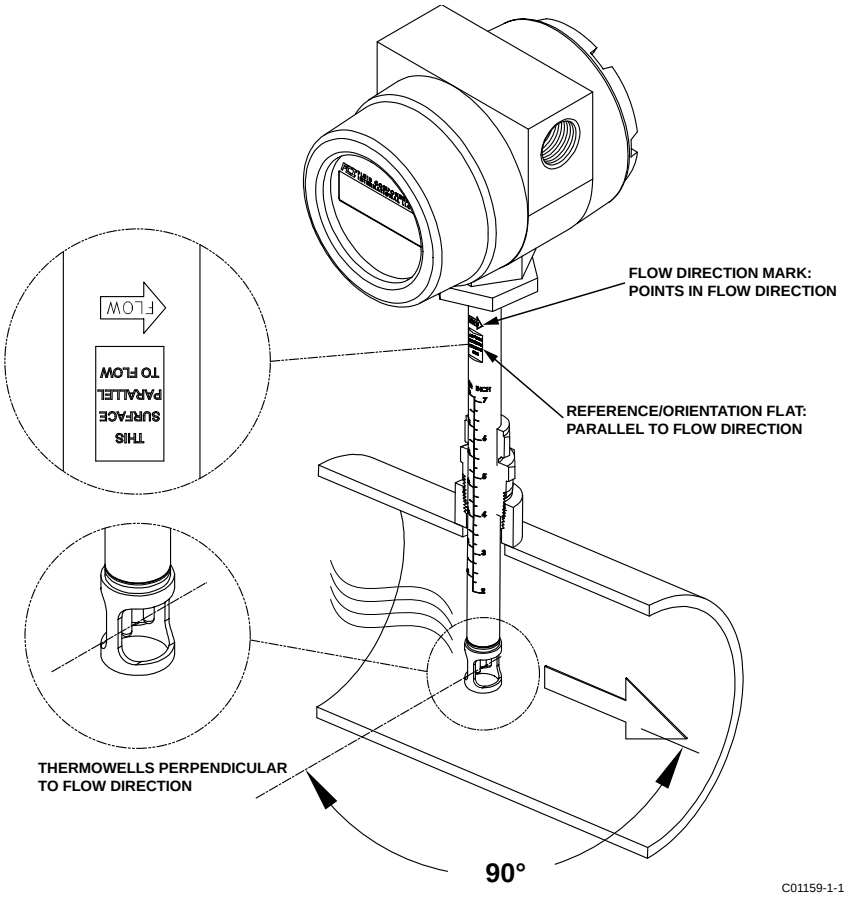

Figure 3 – ST51A Flow Arrow Alignment

Recommended Straight Run

For optimal flow meter performance FCI recommends a minimum of 20 pipe diameters upstream straight run and 10 pipe diameters of downstream straight run. See Figure 4 below. Where straight run is limited, FCI offers Vortab flow conditioners for use in applications that have significant straight run limitations. FCI uses the AVAL application modeling software to predict meter performance in each installation. AVAL outputs are available to review prior to order placement and will indicate performance expectations both with and without flow conditioning.

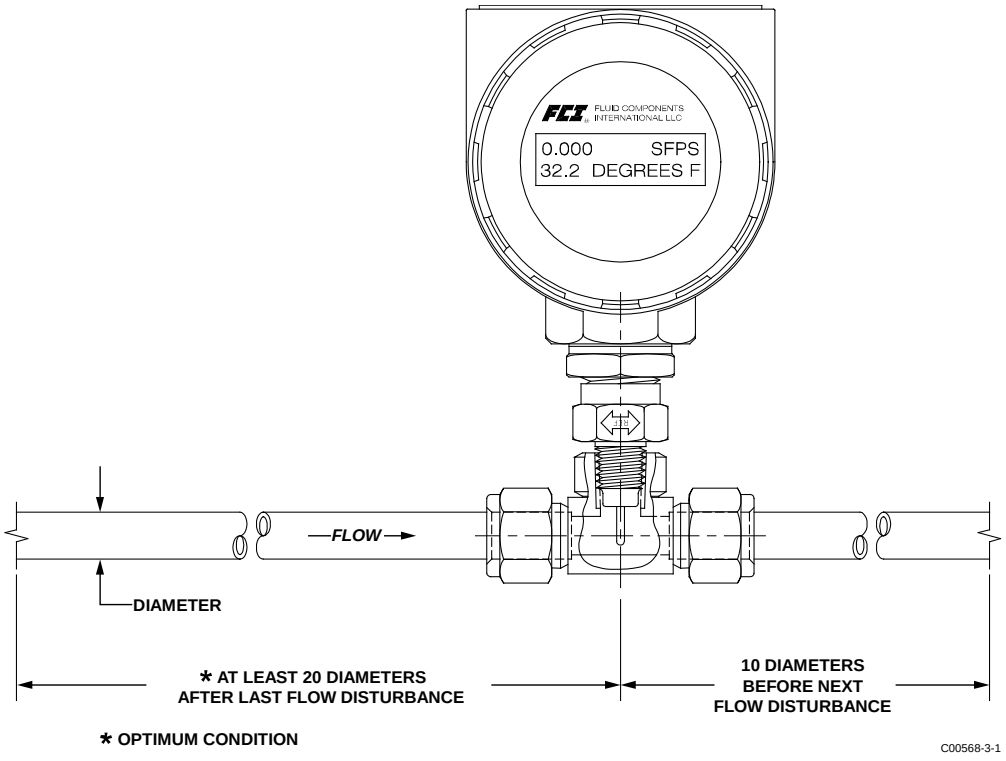

Figure 4 – Recommended Straight Run (ST75A Shown)

Installing ST51A Flow Element

The ST51A is available with both Teflon compression fitting ferrules and metal ferrules. While the Teflon ferrule can be readjusted, it has a lower process pressure rating and over-tightening may cause it to become stuck or damage the extension pipe. The metal ferrule version can only be tightened down once and becomes permanently positioned. The ferrule type is indicated in the instrument part number displayed on the instrument tag. This can be cross-referenced with the Ordering Information Sheet (OIS).

All flow meters have been calibrated with the flow element located at the centerline of the pipe and flow stream as shown in Figure 5. Couplings and threadolets come in various dimensions. Proper installation requires that the element be measured with consideration to process connection dimensions and pipe centerline. Install the element in the line with the compression fitting lightly tightened around the extension, then slowly move the pipe extension forward until the element is at centerline as shown.

Warning: Elements are shipped in a protective sleeve. After removing the sleeve, keep the element from sliding through the compression fitting and contacting the opposing wall with any force. Hitting the pipe wall may damage the element and upset the calibration (critical in top mount installations).

See APPENDIX A for instrument outline dimensional details.

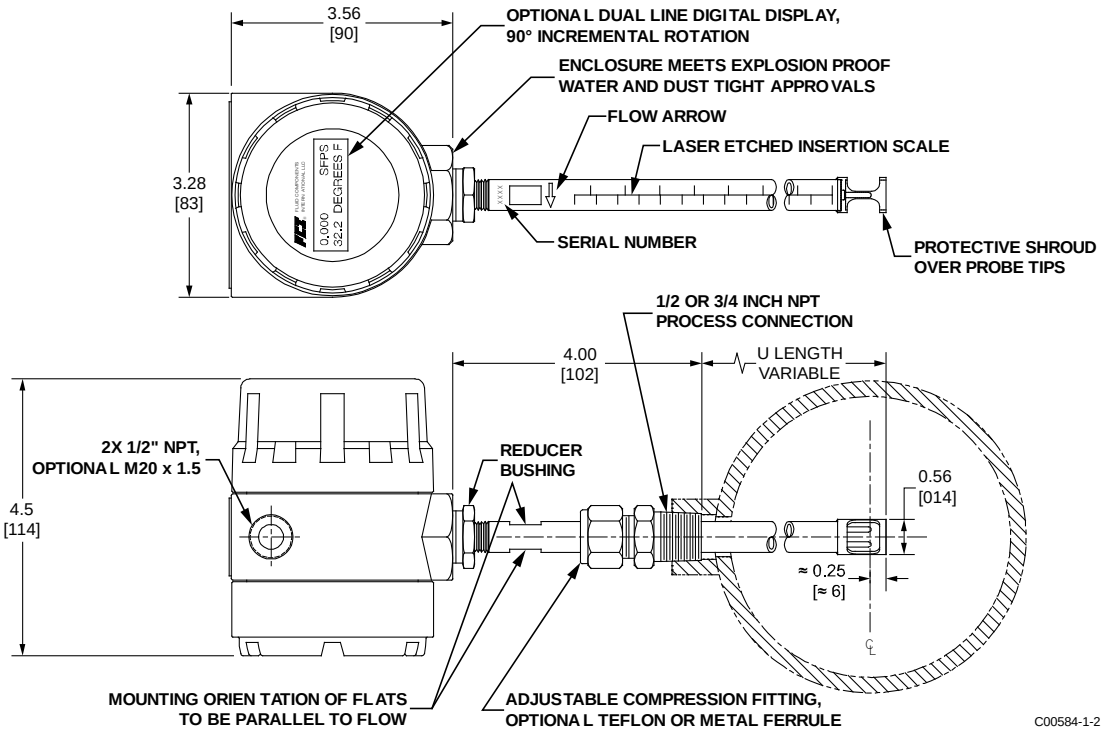

Figure 5 – Flow Element Installation, ST51A

Compression Fitting Mounting

FCI single point insertion flow meters are calibrated at the centerline of the process pipe. The flow element is properly mounted when the tip of the flow element is located 0.25 inches (6 mm) past the pipe centerline. The scale etched on the side of the insertion pipe indicates the length to the tip of the flow element. Follow the steps below to install the ST51A flow element.

1. Calculate the Insertion depth using the equation below.

   I = Insertion depth
   I.D. = Pipe inside diameter
   T = Pipe wall thickness
   C = Pipe mounting coupling and compression fitting (installed length)

   $$I = 0.25" + \frac{I.D.}{2} + T + C$$

   I = _____

2. Mark the insertion pipe at the calculated insertion depth.
3. Apply proper thread sealant to the tapered pipe thread on the compression fitting and secure into pipe mounting coupling.
4. Insert the flow element to the insertion depth mark making sure the orientation flat is aligned parallel to the flow direction. Hand tighten the compression nut. Compression fitting manufacturer recommends 1-1/4 turns past hand tight.
5. Tighten the compression nut to the torque specified for the corresponding ferrule material. See Table 2 below.

Table 2 – Compression Fitting Material

Ferrule	Torque
Teflon	65 in - lbs
316 SST	65 ft - lbs

Note: The metal ferrule configuration can only be tightened one time. Once tightened, the insertion length is no longer adjustable.

Installing ST75A/ST75AV Flow Element

Warning: The element is shipped already installed in the tee oriented for inline installation. Do not remove the sensing element from the tee during installation as performance can be affected.

The ST75A/ST75AV is available in pipe tee configurations with NPT threads and tubing tees with a compression fitting to clamp down on concentric smooth surface tubing. The pipe tee versions are standard 150# class rated tees suitable for service up to 150 PSIG at the process temperature maximum of 250 °F (121 °C). The compression fitting material offered in the tube type configuration is rated for 250 PSIG service. See APPENDIX A for instrument outline dimensional details.

Pipe Tee Installation

With pipe extensions cut to length and sealing materials used on the threads, install flow element section by slowly rotating the configuration until secure. Complete by installing the opposing end pipe section using care to secure the element assembly either in a top mount or side mount position.

Tube Tee Installation

Clean all mating surfaces of the tee fitting, ferrules and the flow tube. Insert the flow tubing into the tee fitting. Make sure the tubing rests firmly in the fitting counter bore seat. Tighten the nut on both ends of the tee by hand. Hold the fitting body steady with a backup wrench and tighten the fitting nuts 1-1/4 turns from hand-tight baseline.

The ST75AV is available with flow tube configurations offering male and female NPT threads, ANSI flanges and DIN flanges. The flow tube assemblies are rated for service up to 240 PSIG at the process temperature maximum of 250 °F (121 °C).

NPT Flow Tube Installation

With pipe extensions properly cut to length and sealing materials used on the threads, install flow element section by slowly rotating the configuration until firmly secure on the pipe section. Complete by installing opposing end pipe section, using care to firmly secure the element assembly either in a top mount or side mount position.

Flanged Installation

Clean all mating surfaces. Install appropriate sealing gasket between mating flanges. Tighten flange mating hardware to meet system sealing requirements.

Re-positioning the Display

The LCD digital display can be rotated in 90° increments to improve its readability if necessary for the application. Referring to Figure 6, follow these steps to re-position the display.

Caution: The instrument contains electrostatic discharge (ESD) sensitive devices. Use standard ESD precautions when handling the instrument.

1. Use .050" hex key to loosen set screw locking window lid and then unscrew window lid from enclosure body.
2. Lift and remove blue bezel.
3. Unplug transmitter/display board from power supply board by pulling display board straight up. Carefully set board aside.

   Warning: To avoid damage to board components use fingers only to remove the board. Do not pry the board off using a screwdriver or similar tool.

4. Removing transmitter/display board exposes power supply board in enclosure body. Remove two securing 6-32 x ¼" Phillips pan head screws and star washers from power supply board.
5. Turn power supply board in 90° steps in either direction until desired orientation is achieved.
6. Secure power supply board to enclosure body using hardware removed in step 4. Use alternate pair of mounting holes in power supply board if required for new display orientation.
7. With transmitter/display board aligned over power supply board (connectors mate only one way) press down to fully engage connectors on both boards.
8. Reinstall bezel over transmitter/display board by engaging bezel guide posts into corresponding holes in display board.
9. Reinstall window lid. Tighten lid one full turn past point where O-ring makes contact with lid, then tighten lid set screw to lock lid (set screw must not protrude from its threaded hole after tightening).

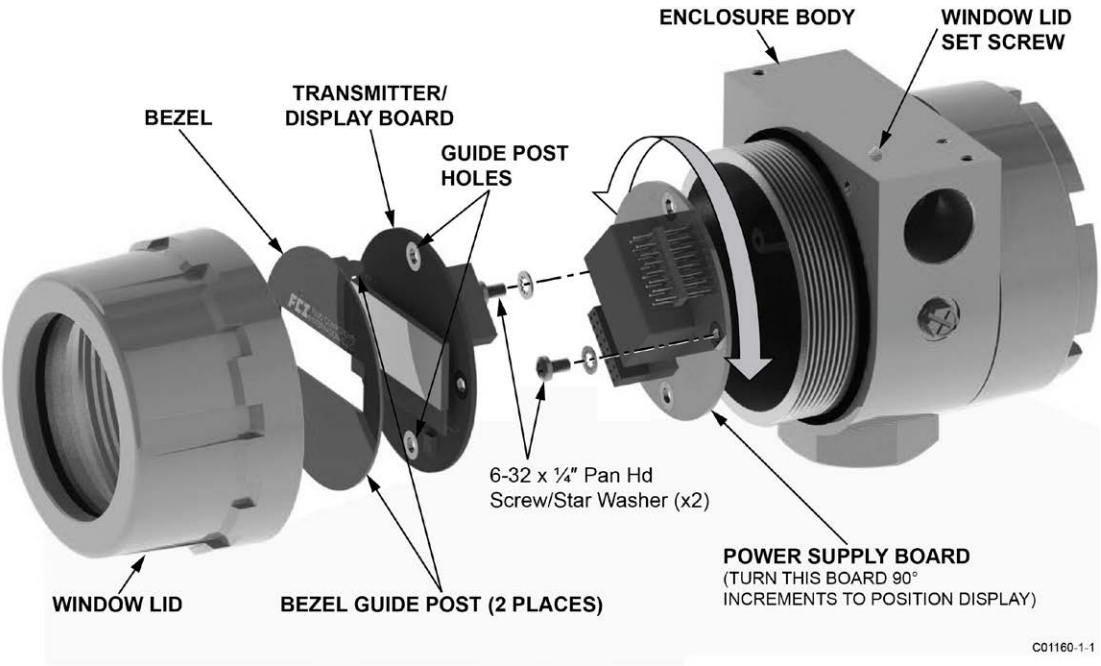

Figure 6 – Display Re-positioning

Installing the Remote Flow Meter System

Remote transmitter instruments include the following components: **local enclosure** containing the flow element sensor, **remote enclosure** containing the display/electronics and interconnecting **remote cable**. Both enclosures are explosion-proof ATEX/IECEx rated. A typical remote flow meter system is shown in Figure 7 below.

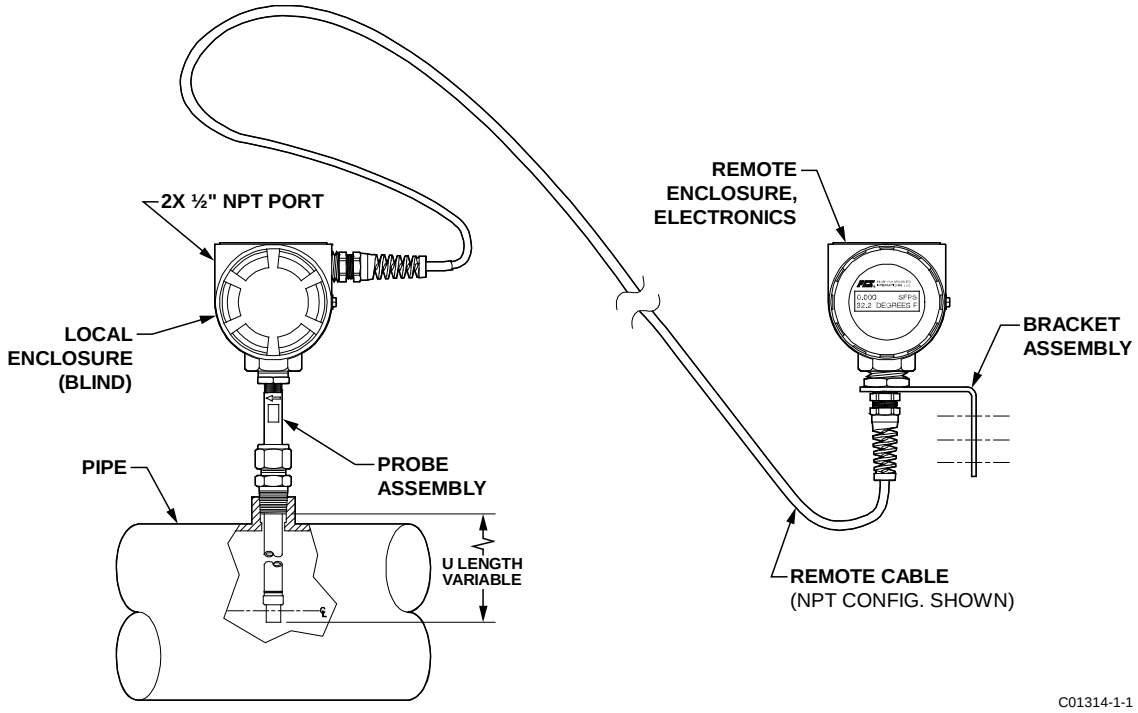

Figure 7 – Typical Remote Flow Meter System (ST51A with ½" NPT Cable Port Shown)

Remote Cable

The remote cable connects the local enclosure's flow element sensor to the transmitter electronics in the remote enclosure. The cable is available in standard lengths (10/25/50/100 ft. [3/7.6/15/30 m]) as well as custom length as specified in the order information sheet (OIS). The customer is to supply the appropriate NPT or metric cable fittings for the remote cable. The cable end terminated in a 2x4 female socket plug connects to the 2x4 pin connector on the interface board inside the remote enclosure. The cable end with 6 metal ferrules connects to Phoenix connector TB1 on the interconnection board inside the local enclosure. Figure 8 below shows the remote cable assemblies with customer-supplied pieces.

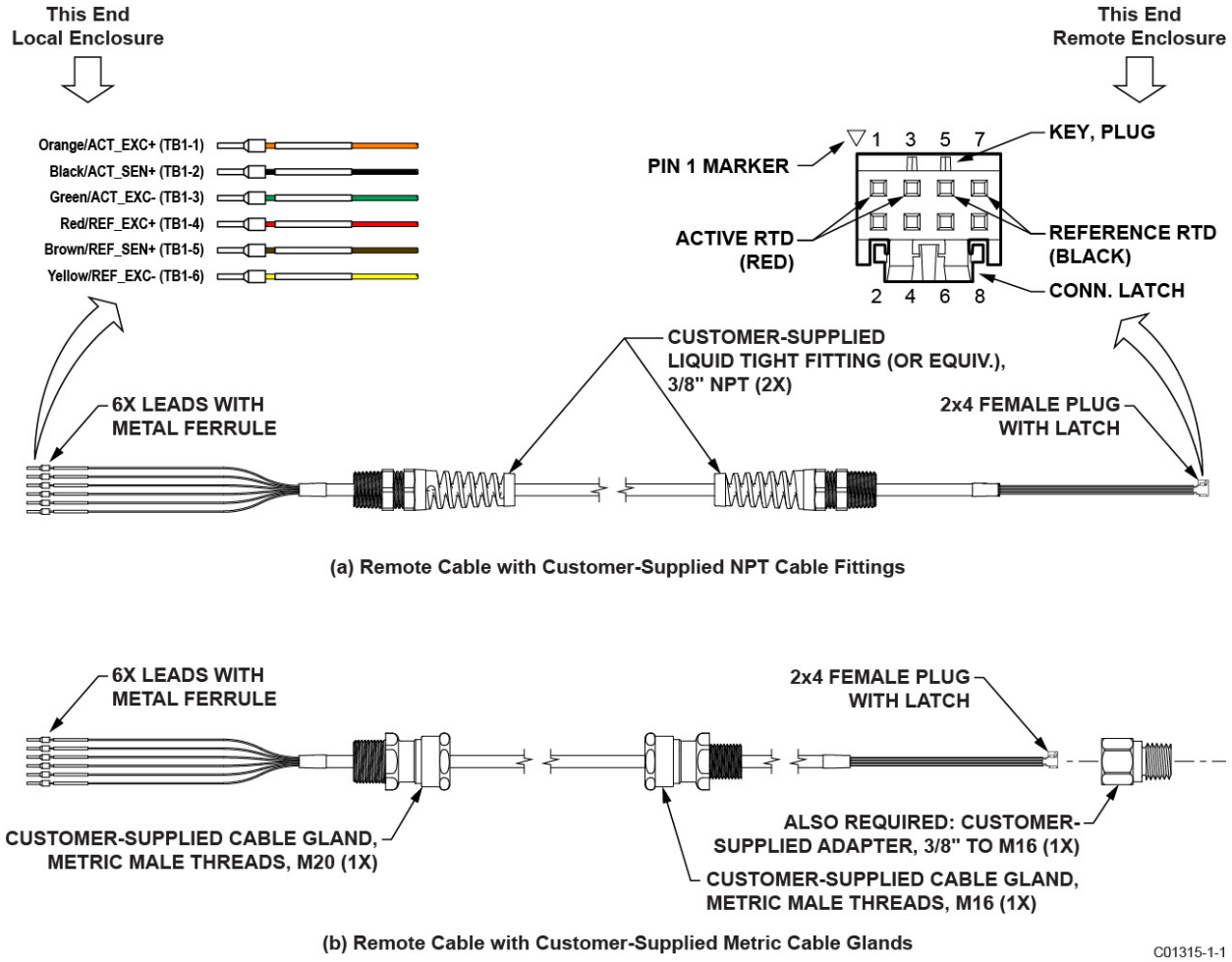

Figure 8 –Remote Cable, Interconnecting

Local Enclosure

Install the local enclosure as described in Installing ST51A Flow Element and Installing ST75A/ST75AV Flow Element above. Depending on the configuration as specified by the order information sheet the ST51A local enclosure is supplied with a ½" or ¾" process connection, and the ST75A/ST75AV is supplied with a male NPT, female NPT or flanged process connection.

Figure 9 below shows the local enclosure remote cable installation.

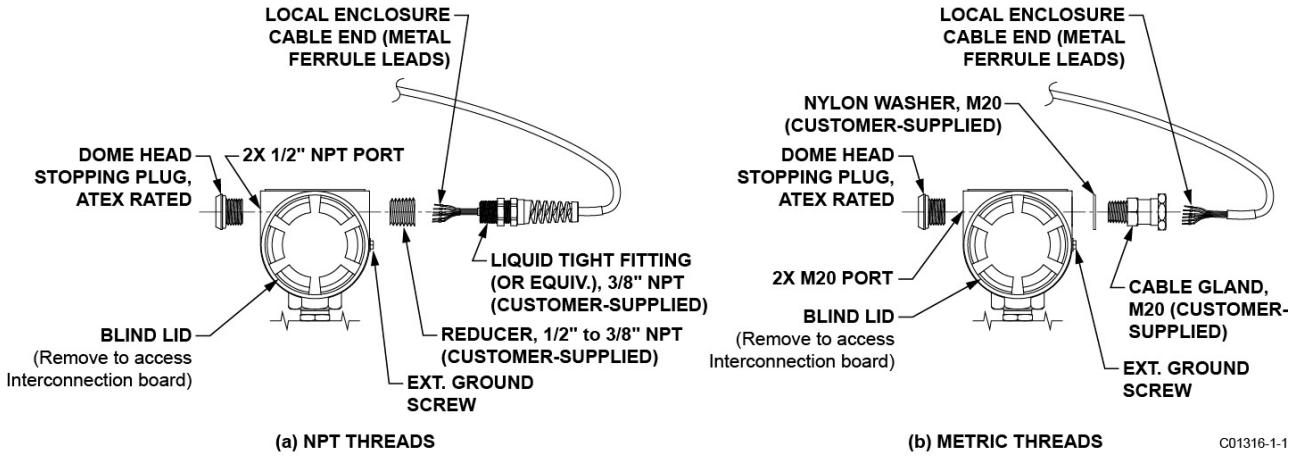

Figure 9 – Remote Cable Installation, Local Enclosure

Figure 10 below shows the remote cable wiring inside the local enclosure. After installing the local enclosure in the pipe follow the steps below to install the local enclosure cable. Refer to Figure 9 and Figure 10 when following the steps.

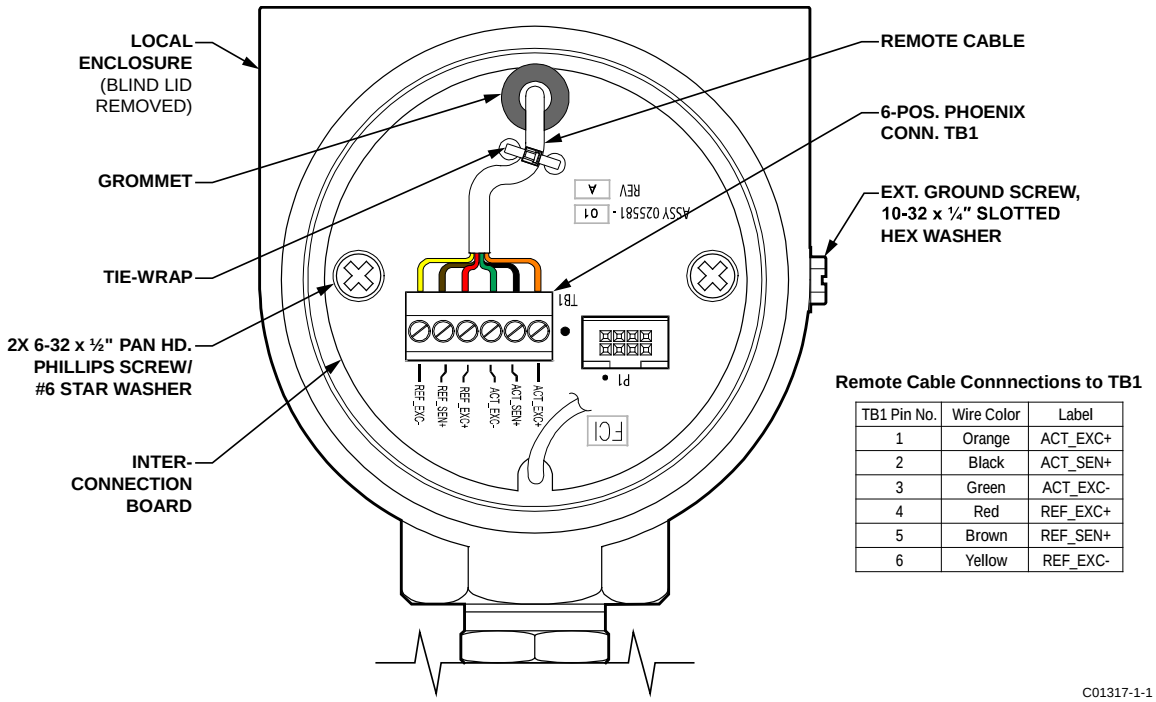

Remote Cable Connnections to TB1

TB1 Pin No.	Wire Color	Label
1	Orange	ACT_EXC+
2	Black	ACT_SEN+
3	Green	ACT_EXC-
4	Red	REF_EXC+
5	Brown	REF_SEN+
6	Yellow	REF_EXC-

Figure 10 – Local Enclosure Remote Cable Wiring

1. Remove local enclosure blind lid covering interconnection board (note orientation of external ground screw in Figure 10). Remove blind lid as described in Accessing the Interface Board Connection Terminals on page 16.
2. If not already installed, install supplied dome head stopping plug in local enclosure's other (unused) cable port.
3. Remove interconnection board (remove two ea. 6-32 x ½" pan hd. Phillips screw/#6 star washer).

4. Install remote cable to local enclosure as shown in Figure 9. For NPT port units: Use an appropriate size reducer as applicable to the cable fitting used and the application. Ensure adequate cable service loop length before tightening the customer-supplied cable fitting.
5. Thread cable end (metal ferrule leads) through interconnection board grommet (from solder side) and un-cinched (open) tie-wrap.
6. Connect the cable leads to Phoenix connector TB1 as shown in Figure 10. After attaching all leads cinch tie-wrap to secure cable to board (snip off excess tie-wrap length).
7. Reinstall interconnection board to local enclosure mounting bosses.
8. Reinstall local enclosure blind lid as described in Accessing the Interface Board Connection Terminals on page 16.

Remote Enclosure

Install the remote enclosure at the desired location using the supplied mounting bracket. Follow the steps below to install the remote enclosure cable. Refer to Figure 11 below when following the steps.

1. Install mounting bracket at desired location.
2. Metric thread application only: Assemble cable gland, washer and adaptor (all customer-supplied items).
3. Thread connector end of the remote cable through customer-supplied cable fitting (3/8" NPT or M16 cable gland/washer/adapter) then make a knot in cable 1.5" (38 mm) from connector tip.
4. Apply Loctite 567 to customer-supplied liquid tight fitting threads or cable gland adapter threads as applicable. Then install customer-supplied liquid tight fitting/cable gland-adapter assembly into mounting bracket reducer bushing making sure that connector end of remote cable exits through reducer bushing.
5. Access remote enclosure interface board as described in Accessing the Interface Board Connection Terminals on page 16.
6. Remove interface board: Remove two ea. 6-32 x ½" pan hd. Phillips screw/#6 star washer, and then unplug board by pulling straight out.
7. Thread remote cable connector end through ¾-14 NPT threaded opening at enclosure bottom.
8. Apply Loctite 567 to mounting bracket reducer bushing threads.
9. Install remote enclosure onto mounting bracket reducer bushing making sure that the fit is tight with the display in the desired orientation.
10. Place remote cable in notch on curved edge of interface board PWB (with connector on component side of PWB) then reinstall interface board. See Figure 12 on page 14.
11. Firmly plug cable connector into interface board connector J4 header until cable connector latch clicks. (Connector is keyed to ensure correct mating.)

    Note: Connector J4 is located differently on AC and DC interface boards (i.e., the J4 location/orientation is not the same for both interface board types).

12. Connect power wiring as described in Power Connections on page 17.
13. Reinstall remote enclosure blind lid as described in Accessing the Interface Board Connection Terminals.

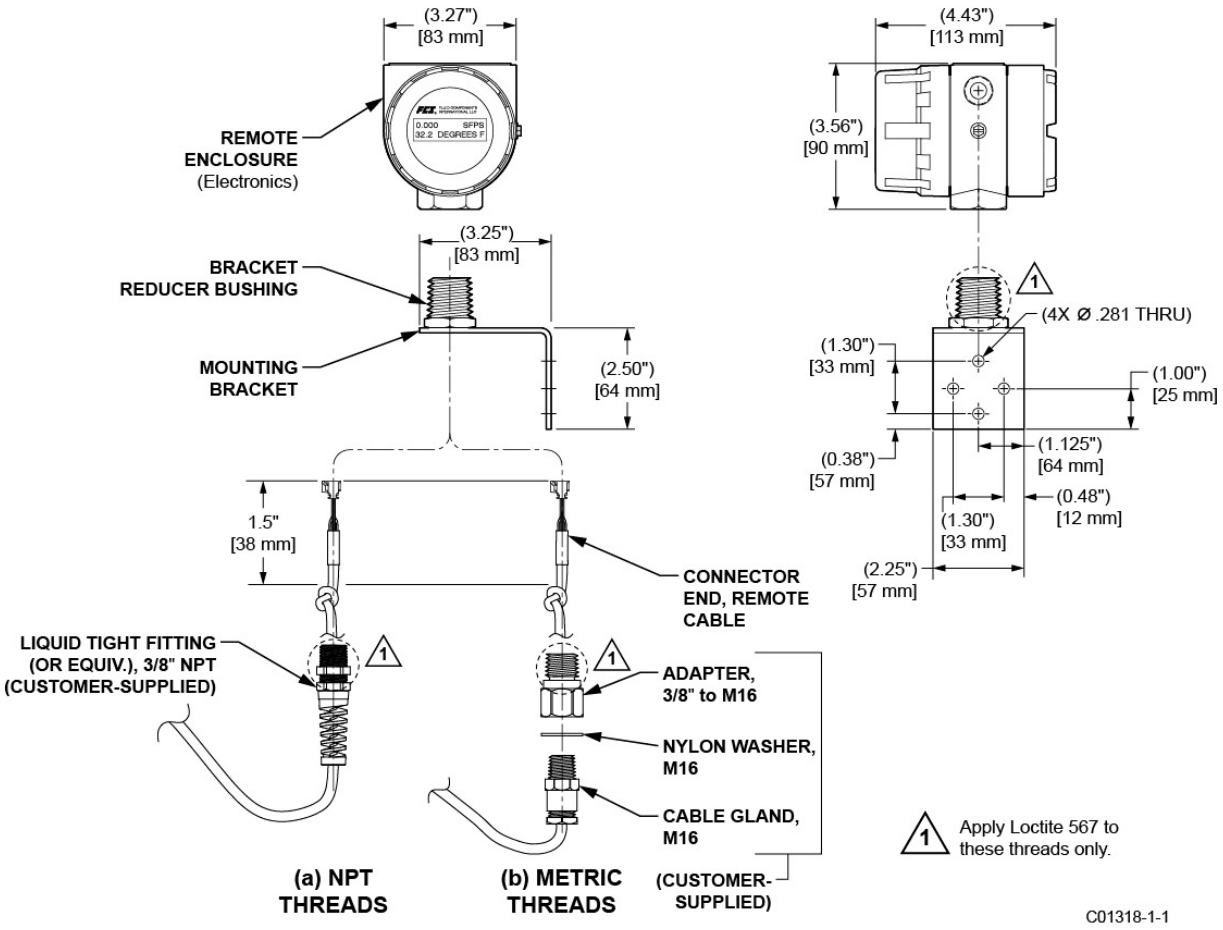

Figure 11 – Remote Cable/Bracket Installation, Remote Enclosure

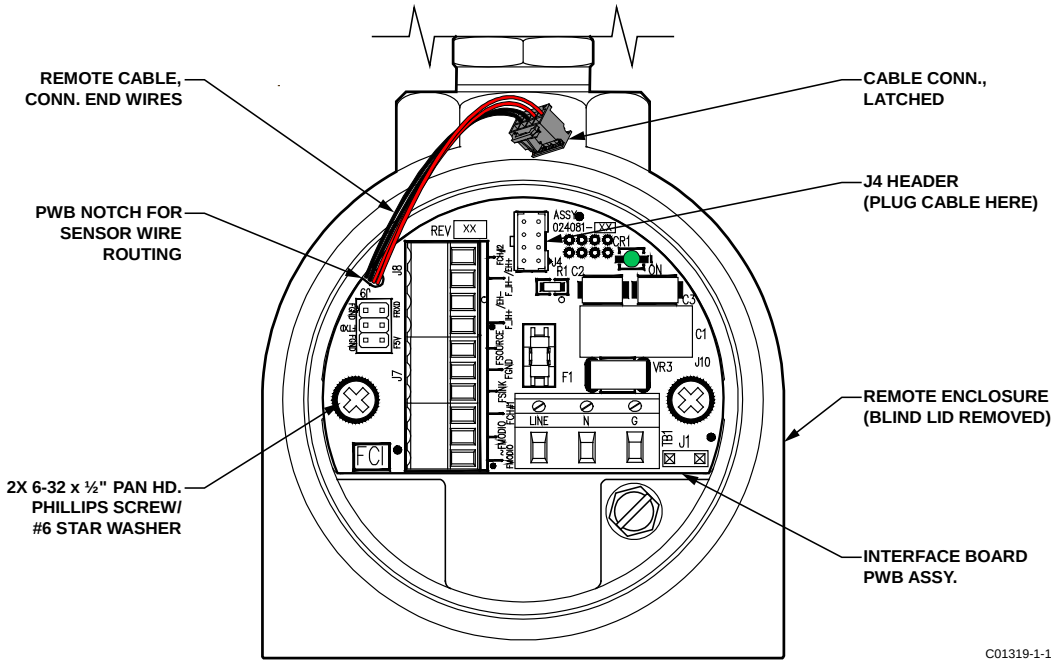

Figure 12 – Remote Enclosure Interface Board Connector J4 Detail (AC Version Shown)

Instrument Wiring

Warning: Only qualified personnel are to wire or test this instrument. The operator assumes all responsibility for safe practices while wiring and troubleshooting.

Install an input power disconnect switch and fuse near the instrument to interrupt power during installation and maintenance. *Always disconnect/shut-off power before wiring*.

See Agency Approvals, page 3 and APPENDIX C, page 83 for a complete listing of the instrument's safety/hazardous areas approvals.

Refer to Figure 13 and Figure 14 below.

A conduit port on each side of the enclosure body is provided for wiring access. These ports are labeled with its thread size (½" NPT or M20) via the instrument tag and a label near each port. Either or both ports can be used for wiring. Use an appropriate plug on the unused port. For the neatest wire routing use the wiring port closest to J7/J8 for all signal wiring and the wiring port closest to power connector TB1 for power wiring. Provide a service loop for all connections to make rewiring/repairs easier.

An external and internal ground screw (10-32 x ¼" slotted hex washer) is provided. Use the external ground screw as needed. For example, use the external ground screw if the probe connection does not make a reliable ground such as a plastic pipe. For EU applications use only the internal ground screw.

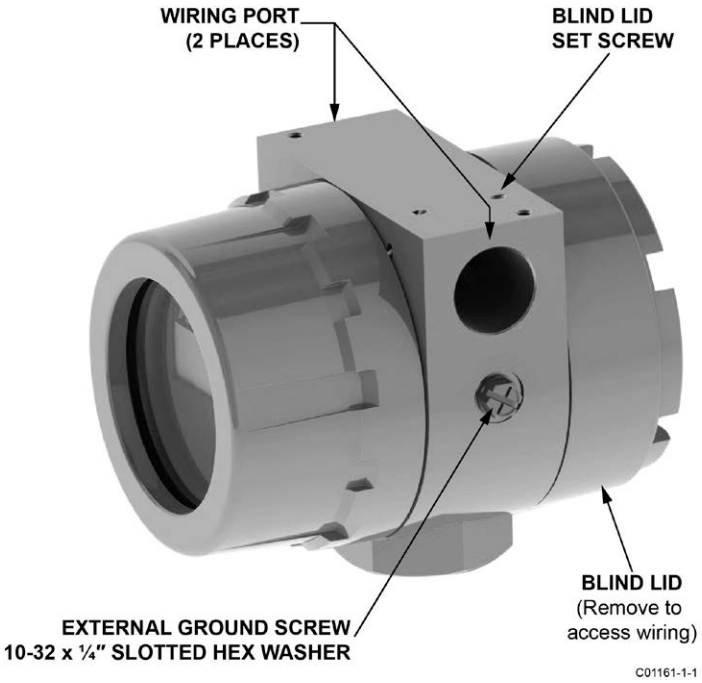

Figure 13 – ST51A/ST75A/ST75AV Wiring Access

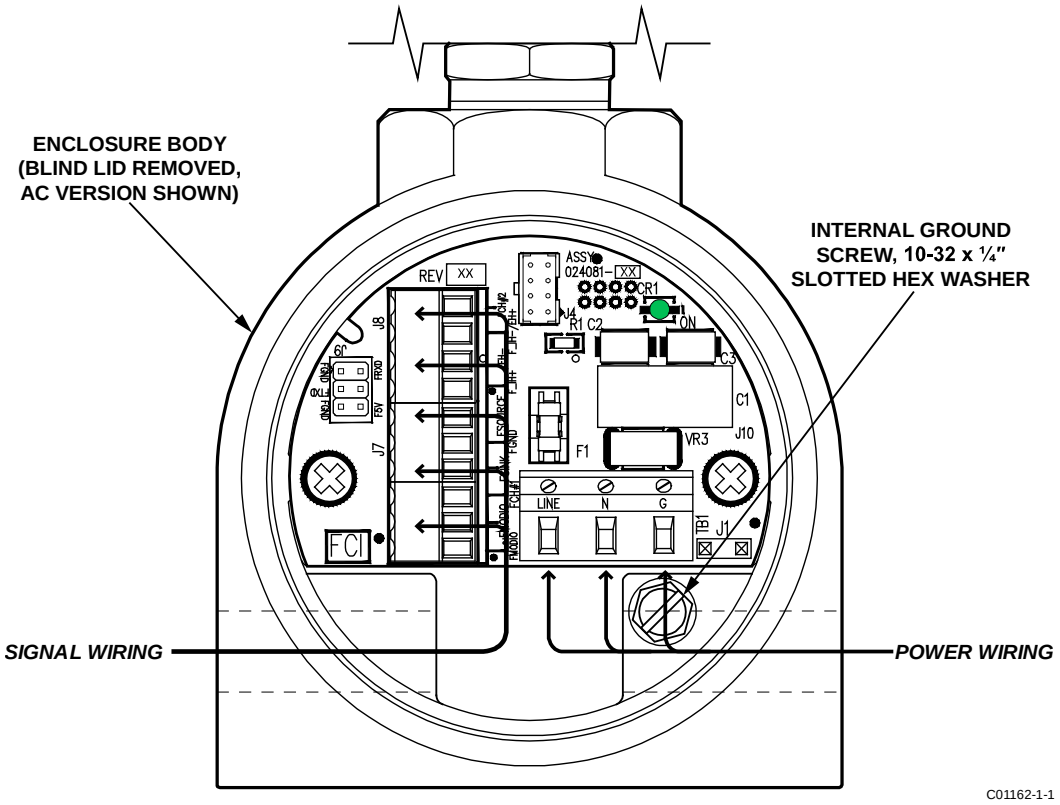

Figure 14 – Recommended Wire Routing/Internal Ground Screw

Accessing the Interface Board Connection Terminals

Warning: Turn OFF instrument power source before wiring the instrument.

Caution: Use caution inserting wires into electronics housing. The metal ends can damage circuit boards.

Remote Units: Avoid pulling, or inadvertently tugging, the remote cable when wiring the instrument. The sensor connector/circuit board can be easily damaged by excess pulling of the remote cable.

To access the instrument's connection terminals first use a .050" hex key to loosen the set screw locking the enclosure body blind lid (see Figure 13, page 15). Then unscrew the blind lid from the enclosure. Carefully pull the power and signal wires through the port to avoid damaging the electronics.

Connect wiring as shown in the diagram in Figure 15, page 17 and the summary list in Table 3, page 18. Reinstall the blind lid when done making the connections: Tighten the lid one full turn past the point where the O-ring makes contact with the lid, and then tighten the lid set screw to lock the lid (set screw must not protrude from its threaded hole after tightening).

ESD Precautions

Caution: FCI flow meters contain static-sensitive devices. To avoid damage to the instrument observe the ESD precautions listed below before opening the instrument for wiring.

- Use a wrist band or heel strap with a 1 MΩ resistor connected to ground.
- Use a static conductive mat on the work table or floor with a 1 MΩ resistor connected to the ground when working on the instrument in a shop setting.
- Connect the instrument to ground.
- Apply antistatic agents such as Static Free made by Chemtronics to hand tools used on the instrument.
- Keep high static-producing items away from the instrument.

The above precautions are minimum requirements. The complete use of ESD precautions can be found in the U.S. Department of Defense Handbook 263.

Power Connections

Warning: Turn OFF instrument power source before wiring instrument power.

The instrument is offered in DC and AC input power configurations. DC units include DC interface and power supply boards. Similarly, AC units include AC interface and power supply boards. Interface boards are specifically marked for AC or DC power. Only connect the power specified on the wiring module as shown in Figure 15. Both AC and DC inputs require a ground wire to be connected. Input power terminal blocks accept 14-26 AWG wire. Observe power wire routing as described in Instrument Wiring, page 15.

Onboard Power ON LED Indicator

An LED on the interface board lights up green when instrument power is ON. The LED is visible only when the blind lid is removed, which serves to alert the user that power is active when accessing the instrument's signal/power wiring.

Typical Customer Connections

FCI Electronics Side		Ch. #1 4-20 mA HART (Ext. Power Source)	Ch. #1 4-20 mA HART (Int. Power Source)	Ch. #2 4-20 mA	Pulse (Int. Power Source)	Pulse (Ext. Power Source)
J8	4			+		
	3	+	–			
	2	–				
	1		+			
J7	6				+	
	5			–	–	–
	4					+
	3					
	2					
	1					

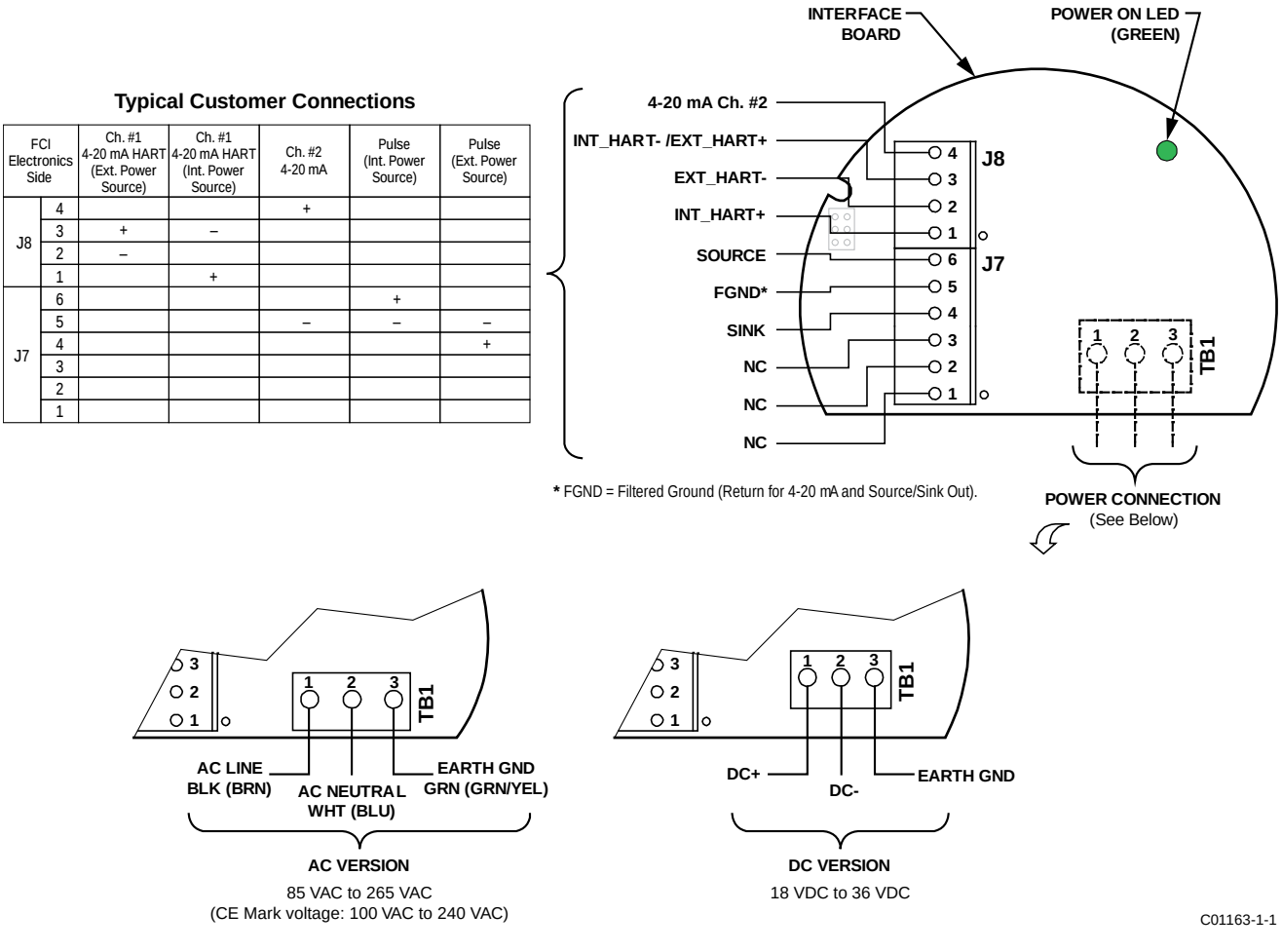

Figure 15 – Power and Signal Wiring Terminals

Power Fuse Replacement

Input power overload protection is provided by a 1.5 A slo-blo surface mount fuse installed in a fuse holder on the interface board. (To access this board see Accessing the Interface Board Connection Terminals, page 16.) Refer to Figure 16 below.

- AC-powered instruments: Locate the fuse at the center of the interface board on top.
- DC-powered instruments: Locate the fuse at the center of the interface board on the back (solder side). With power OFF remove two securing 6-32 x ½" Phillips pan head screws and star washers from the DC-powered interface board. Pull board straight up from mating sockets to access the fuse at the back.

To check for a blown fuse:

1. Turn instrument power OFF.
2. Access the interface board (see text above).
3. Using an ohmmeter touch metal cap at each end of fuse with the test leads. Any reading other than a short (i.e., open circuit) indicates a blown fuse. Replace with Littelfuse 454 Series fuse, part no. 045401.5.

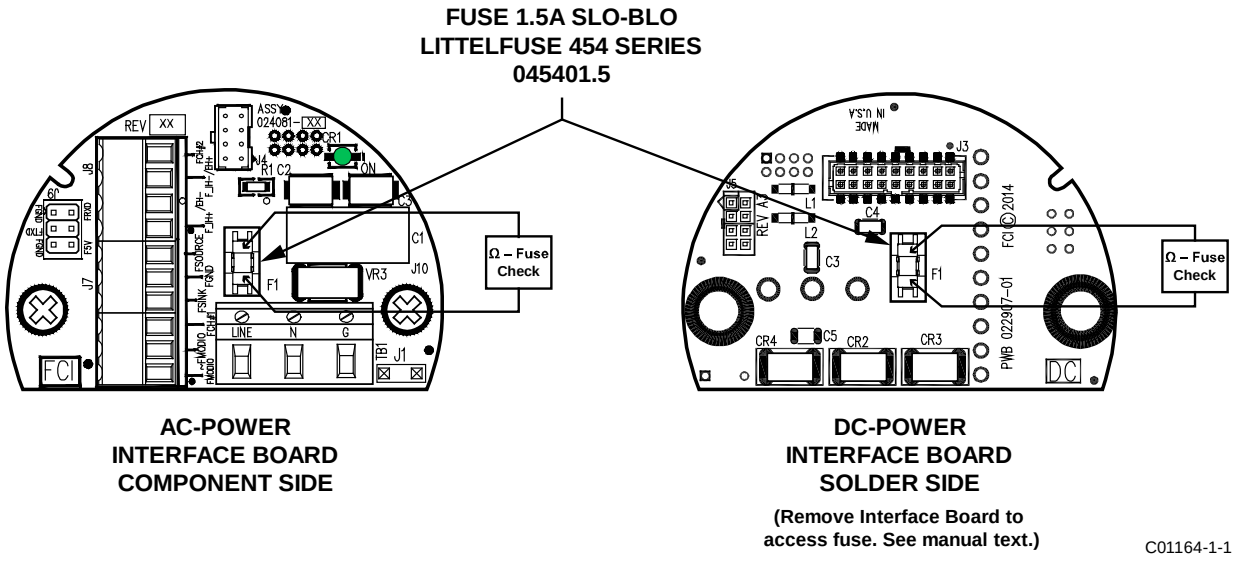

Figure 16 – Input Power Fuse Locations

Table 3 – Power and Signal Wiring Summary

Connector	Pin No.	Function	Description
J8, Signal	1	INT_HART+	Internal HART connection (+)
	2	EXT_HART-	External HART connection (-)
	3	INT_HART-	Internal HART connection (-)
		EXT_HART+	External HART connection (+)
	4	4-20 mA Ch. #2	4-20 mA output #2 – default parameter assignment: *Temperature*
J7, Signal	1	NC	No Connection/Reserved
	2	NC	No Connection/Reserved
	3	NC	No Connection/Reserved[1]
	4	SINK	Sink Output
	5	FGND[1]	*Return* for 4-20 mA Ch. #2 and Source/Sink.
	6	SOURCE	Source Output
TB1, AC Power: 85-265 VAC (CE Mark: 100-240 VAC)	1	AC LINE	AC Line (typical wire color: black or brown)
	2	AC NEUTRAL	AC Neutral (typical wire color: white or blue)
	3	EARTH GND	Earth Ground (typical wire color: bare, green or green/yellow)
TB1, DC Power: 18-36 VDC	1	DC+	DC Positive (typical wire color: red or white)
	2	DC-	DC Negative (typical wire color: black)
	3	EARTH GND	Earth Ground (typical wire color: bare, green or green-yellow)

Notes: 1. FGND = Filtered Ground.

Caution: To maintain isolation between power input and output signals, keep FGND and EARTH GND separate.

Signal Connections

The J7 and J8 terminal blocks are provided for signal connections. These terminal blocks have 3.5 mm pitch spacing and accept 28 AWG (min.) to 14 AWG (max.) wires. Observe signal wire routing as described in Instrument Wiring, page 15.

4-20 mA Analog Outputs

The instrument is provided with two 4-20 mA current loop channels as standard. By default Channel 1 (J7 pin 3) is assigned flow and Channel 2 (J8 pin 4) is assigned temperature. Connect the instrument's 4-20 mA outputs as required for your application. Use the FGND terminal for the current loop return (can also use the EXT_HART+ terminal). See Figure 15, page 17 and Table 3, page 18. See V Menu: Configure Outputs (4-20 mA and Digital Outputs), page 26 for details on setting up the analog outputs.

HART Connections

Connect the installation HART wiring to the appropriate J8 terminals depending on the application.

- Single Connection – The instrument supplies power to the loop and controls the current as well. For this application connect HART+ to J8-1 and HART- to J8-3.
- Network (Multidrop) Connection – The instrument receives loop power from the network, and controls the current. For this application connect EXT_HART+ to J8-3 and EXT_HART- to J8-2.

The block diagram in Figure 17 below shows the single connection and multidrop HART setups. Use a 250 Ω 1%, ≥ 0.3 W resistor as shown in the diagram below ***only*** if the external HART interface/wiring does not have this resistance built-in (HART requires a minimum loop resistance of 230 Ω).

See also Figure 15, page 17 and Table 3, page 18. If using a handheld HART communicator/calibrator connect it to the line as described by the manufacturer's instructions.

CABLING RECOMMENDATION

Use a shielded, twisted-pair instrument grade wire (min. 24 AWG for runs less than 5000 ft/1500 m; min. 20 AWG for longer distances). The RC value of the wire (*Total Resistance* x *Total Capacitance*) must be less than 65 µs (not a concern for point-to-point topology with a run less than 328 ft/100 m). A cable designed for HART/RS-485 such as Belden 3105A is recommended for complex setups and/or particularly long runs.

Note: The HART communications digital signals are superimposed on top of the channel #1 current loop (4-20 mA) output. When HART communications is in use, the HART current loop channel #1 MUST be configured as FLOW to comply with the HART protocol. The channel #1 current loop output is configured as FLOW by default at the factory.

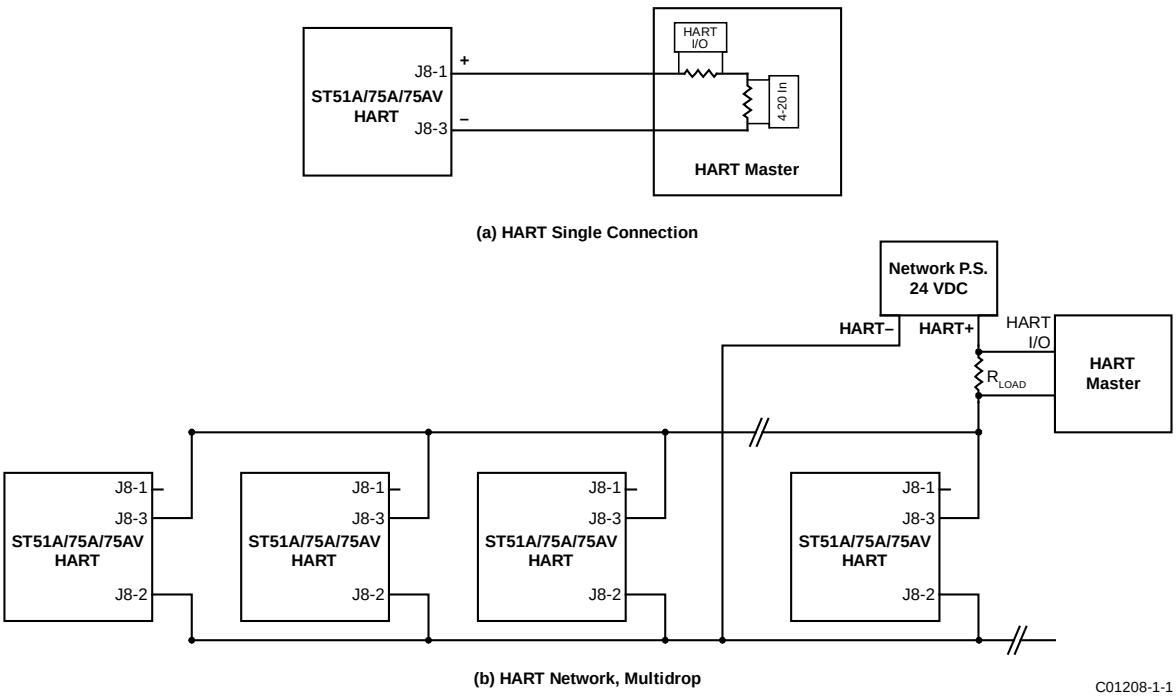

Figure 17 – Single Connection and Multidrop HART Setups

Pulse Output and Alarm (Source/Sink)

Wire the source/sink outputs via the J7 terminals as required for your device (using sink and/or source output as appropriate) as shown in Figure 18 and Figure 19 below. Either output can be used as a pulse output or a level (alarm) output. Observe the output power limits listed below.

- Sink Output: 40 VDC maximum, 150 mA maximum (external, user-supplied power source)
- Source Output: 22 ±2 VDC output, 25 mA maximum (supplied by the flow meter)

See Source/Sink Output Configuration, page 28 for details on configuring the output as a pulse or level output.

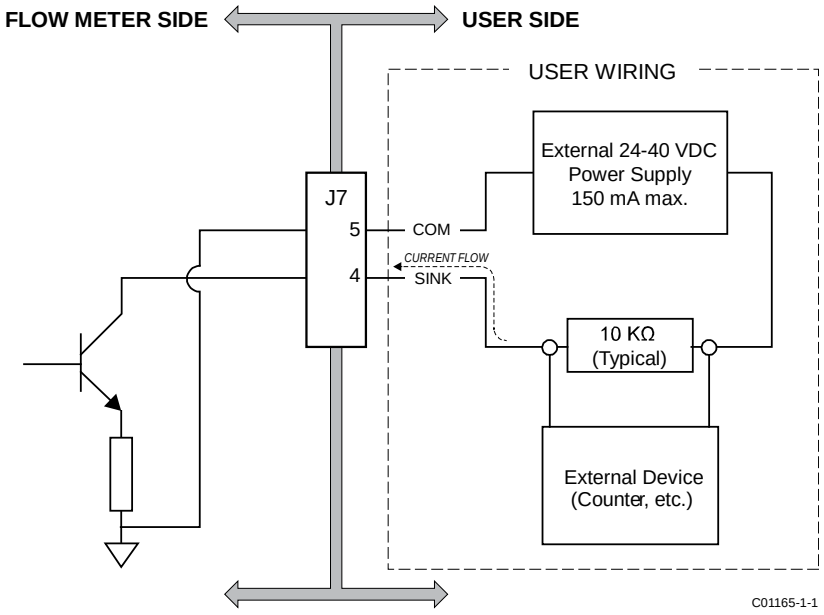

Figure 18 – Sink Output

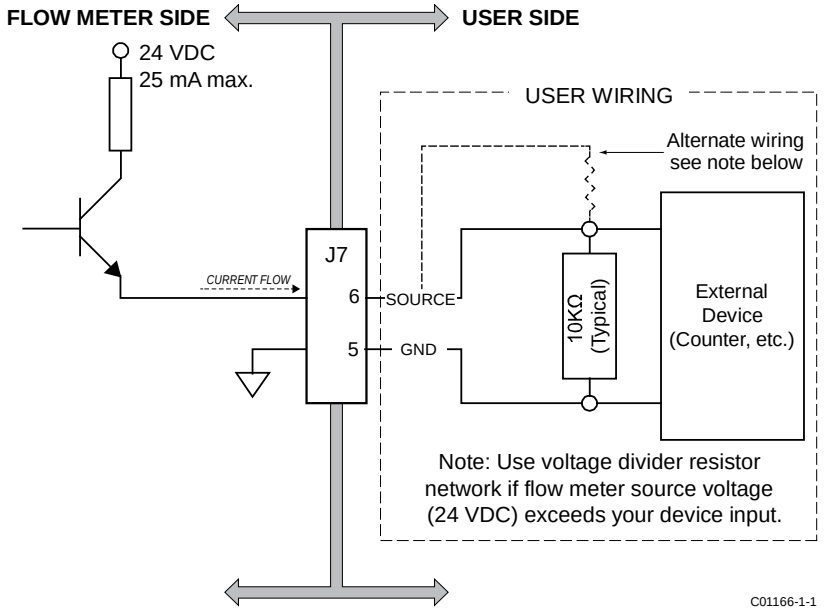

Figure 19 – Source Output

Serial Interface Connector J9

An RS-232 serial port is provided via a .100" 2 x 3 header connector (J9) on the interface board (remove blind lid for access, see Accessing the Interface Board Connection Terminals, page 16. The J9 pinout is summarized in Table 4 below. Plug the RJ12 serial I/O adapter assembly (024141-01), included in the FCI Flow Meter Communications kit (part no. 014108-03), onto the J9 header with the RJ12 jack oriented as shown in Figure 20 below. Then connect the RJ12 cable and additional adaptor(s) (most included in the optional communications kit) as required to make the connection. The block diagram in Figure 21 summarizes the connections available via the RJ12 serial I/O adapter. Refer to Instrument Configuration and Setup Using the Service Port (RS-232) on page 23 for details on using the serial port.

Note: The instrument's serial port is intended for temporary use only.

Table 4 – Serial Port J9 Pinout

Pin	Function	Pin	Function
1	FGND[1]	2	RxD
3	TxD	4	—
5	FGND[1]	6	5V

Note: 1. FGND = Filtered Ground

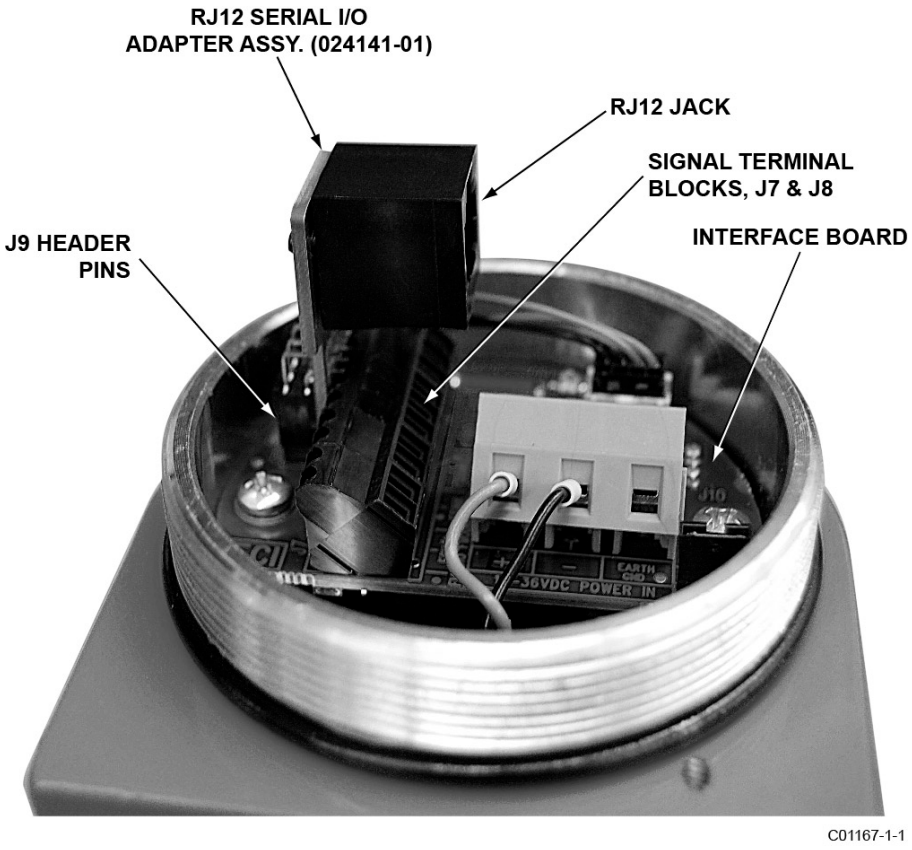

Figure 20 – RJ12 Serial Adapter Installed on Flow Meter J9 Header Connector

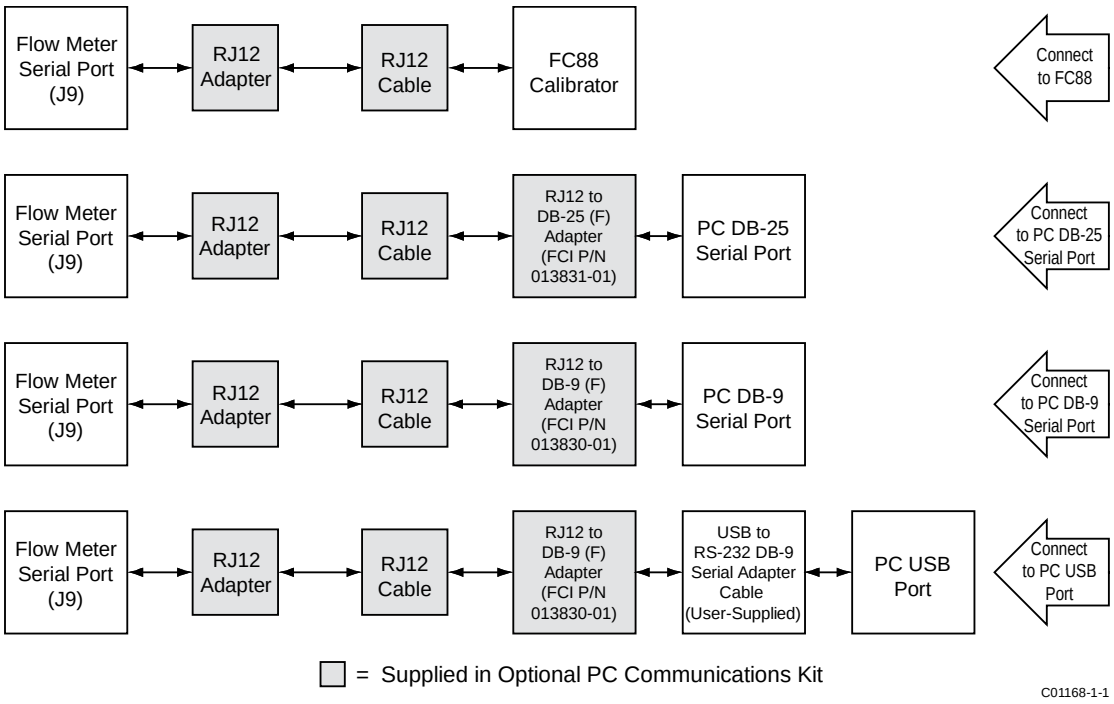

Figure 21 – Block Diagram: Flow Meter Serial Port Connections, FC88 and Computer

Caution: To avoid spurious reset remove power to the flow meter first before attaching the FC88. Reapply power to the flow meter after the FC88 is connected.

3 OPERATION

Overview

The ST51A/75A Series flow meters are configured at the factory for the customer-specified display and output settings. See the calibration information shipped with the instrument to review this information. Follow the steps in this section to change the display and outputs if desired.

Note: ST51A/ST75A units with a "Standard Calibration" (0 or A in Block 6 of the part number) are delivered in flow units of Standard Feet per Second (SFPS). Follow the steps in this section to customize the display and outputs if needed.

Instrument Configuration and Setup Using the Service Port (RS-232)

If configuration or setup changes are needed, the ST51A/ST75A/ST75AV is provided with a serial interface for displaying and/or changing its configuration using FCI's handheld FC88 Calibrator or a computer running a terminal program (for a serial console setup). See Serial Interface Connector J9 page 21 for serial port connection details.

Note: The serial port is intended for temporary use only.

Caution: Only factory-trained personnel are to configure or make setup changes to this instrument.

Caution: To avoid spurious reset, remove power to the flow meter first before attaching the FC88. Reapply power to the flow meter after making the FC88 connection.

To make a serial console connection to the flow meter use your preferred terminal program (e.g., Tera Term Pro or equivalent) to configure the PC's serial port using the parameters summarized in Table 5 below. For PC USB port: Use Windows' Device Manager to see the virtual COM port number that Windows assigned to the USB-to-serial adapter. Specify this virtual COM port number in the terminal program configuration.

Table 5 – Serial (COM) Port Configuration

COM Port Number:	Number of COM port connected to instrument (see text above)
Baud Rate:	9600
Number of Bits:	8
Stop Bits:	1
Parity:	None
Flow Control:	None
Terminal Emulation:	VT100

Plug the FC88 into the instrument before power is applied. If the FC88 is plugged in while the instrument power is on and the FC88 does not respond, press [ENTER]. If there is still no response press [N] or cycle the power.

Most entries require at least two keystrokes: a capital letter or number and the [ENTER] key. User entries begin at the input mode prompt ">", except when the instrument is in the Main Function Mode (just press/enter the desired function letter followed by [ENTER] to make an entry).

Backspaces are made using the [BKSP] key. Letters are case sensitive. For PC serial console: Use upper case letters only (for this application the Caps Lock key is helpful). For FC88: Use the [SHIFT] key to alternate between letters and numbers. A square after the prompt caret indicates the FC88 is in letter mode. A slightly elevated rectangle indicates the FC88 is in number mode.

Main Menu

The serial interface provides a main menu, shown below, to access various functions. The FC88 shows this menu by scrolling through the lines.

```
Mode?
1=RS-232
3=HART    4=Config
5=Update Firmware >
```

Choose a mode by entering its number.

- RS-232 (1) – Enter "1" to place the instrument in the RS-232 serial pass-through mode. The display responds with:

  ```
  ST51A/75A Pass Thru
  (ESC to exit)
  ```

  In this mode the console or FC88 display shows the same information displayed by the instrument. This is the normal mode when using the instrument's serial port (for temporary programming access and/or parameter review). Once in the RS-232 mode press ESC (FC88: SHIFT+ESC) to return to the main menu.
- HART (3) – Enter "3" to operate the instrument in the HART mode.
- Config (4) – Reserved for factory-use only.
- Update Firmware (5) – Reserved for factory-use only.

Enter "ESC" (FC88: SHIFT+ESC) at any time within a mode to return to the main menu.

Top Level Menu Commands

Place the instrument in the RS-232 mode to access the serial interface top level menu commands. These commands are listed in Table 8, page 29. Enter (or for FC88, *press*) the uppercase letter as listed in the table followed by [ENTER] to run the command. These commands can be exited at any time by entering "Q" followed by [ENTER]: D, F, G, L, S, V and W. Some commands cannot be exited until an entry/choice is made or the power is recycled.

Some commands result in a prompt asking for a factory pass code. If this occurs, contact FCI Field Service. Do not change any parameters that require this code without understanding the instrument's operation.

Secondary Commands: CLI

The instrument can be accessed with a secondary set of CLI (command line interface) commands. Access these commands using the "Y" command (passcode = 357). With CLI commands an internal parameter is assigned a 2-character command mnemonic for reading or writing its value. The basic command format (syntax) for a CLI command is:

R*yz* [ENTER] ← Read

W*yz* = <value> [ENTER] ← Write

...where R (Read) or W (Write) is followed by the 2-character (*yz*) command mnemonic followed by [ENTER]. When writing a value, the 2-character command mnemonic is followed by an equals sign or space, the data value and then [ENTER]. To exit CLI command mode press [ENTER] twice. See Table 9, page 30 for the complete list of CLI commands. In this table the parameter's command function shows whether it can be written or read (WR), write-only (W) or read-only (R).

Start-up and Commissioning

1. Verify all input power and output signal wiring is correct and ready for initial power start-up.
2. If displaying/configuring instrument programming connect the FC88/computer to the flow meter (Power OFF first). See Serial Interface Connector J9 page 21 for serial port connection details.
3. Apply power to instrument. The instrument initializes in the Normal Operation Mode with all outputs active. For instruments with the display option: Observe that the display shows flow with the factory-set flow units. The instrument indicates 0.000 for zero or no process flow. Allow 10 minutes for the instrument to reach thermal equilibrium.

Table 6 below lists the most often used top level serial interface commands for configuring the instrument. Refer to Table 8, page 29 for the complete list of commands.

Table 6 – Typical Serial Interface Top Level Commands for Flow Meter Configuration

Command	Name	Description
T	Normal Operation Mode	Normal operating mode: All outputs are active.
Z	Flow Unit Set-up	Set English/Metric flow units; set up pipe dimensions for volumetric units.
V	Output Configuration	Set 4-20 mA and pulse output configuration.
S	Totalizer Menu	Enables W menu (option)
W	Totalizer	Enable/Disable
F	K-Factor (default=1)	Flow factor
N	Warm Reset	Reinitialize Instrument

Z Menu: Configure Flow Units and 4-20 mA Output Scaling

Use the Z menu to change flow units. Note, however, that changing units requires rescaling of the unit (set new zero and span). The 4-20 mA Zero and Span can be changed from the original calibration, provided the new values are within the original calibrated range; i.e., if the original calibration was 1 to 100 SCFM (4-20 mA), the new zero (4 mA) must be equal to or greater than 1 SCFM and the new span (20 mA) must be equal to or less than 100 SCFM. The flowchart in Figure 22 below gives an overview of the instrument's Z menu programming.

Note: The Z menu is passcode protected when the totalizer function is enabled. Contact the factory for details.

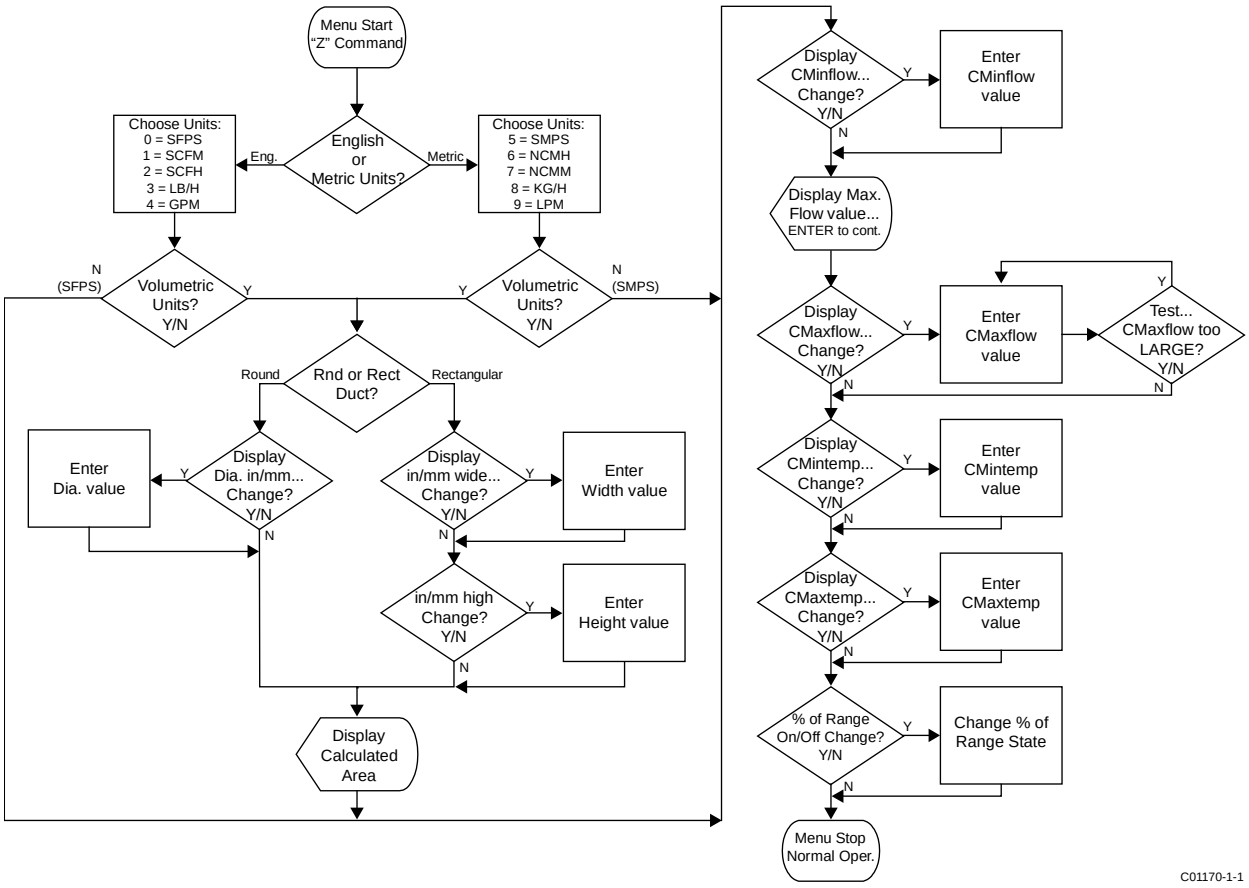

Figure 22 – Z Menu Command Structure: Units and Scaling Setup

Changing Flow Units, Example

Table 7 below lists the steps for making a flow units change with these example parameters: SCFM Flow Units and 3-inch Schedule 40 round pipe size set-up:

Table 7 – Flow Unit Example

Command	Display	Description
ENTER	Menu: >	Starting from Normal Operation Mode.
Z	E for English, M for Metric	After entering Flow Unit Set-up menu (Z), select English or Metric units.
E	0=SFPS, 1=SCFM, 2=SCFH, 3=LB/H, 4=GPM	After selecting English units (E), select specific type units. For this example: SCFM (1) which is a volumetric unit.
1	R Round duct or S rectangular	After selecting Standard Cubic Feet, select round or rectangular duct.
R	Dia.: 4.0260000 Change? (Y/N)>	After selecting Round duct (R), change displayed Diameter parameter?
Y	Enter value: #	After responding "Y" to diameter change, enter diameter value.
3.068	Area: 7.3926572 CMinflow: 0.0000000 Change? (Y/N)>	After entering value for diameter, the computed area is displayed. Change displayed CMinflow parameter?
N	Maximum flow: 462.04 Enter to continue	After responding "N" to CMinflow parameter change, the max. flow is displayed. Press ENTER to continue.
ENTER	CMaxflow: 462.04 Change? (Y/N)	Change displayed CMaxflow parameter?
Y	Enter value: #	After responding "Y" to CMaxflow change, enter CMaxflow value. (Note: Instrument checks if resulting max. flow is too large.)
462.04	CMintemp (F): -40.00000 Change? (Y/N)>	After entering value for CMaxflow, change CMintemp (F) parameter?
N	CMaxtemp (F): 250.00000 Change? (Y/N)>	After responding "N" to CMintemp change, change CMaxtemp (F) value?
N	Percent of Range is: OFF Change to ON?>	After responding "N" to CMaxtemp change, change Percent of Range On/Off status?
N	100.0 SCFM	After responding "N" to Percent of Range On/Off status change, instrument returns to Normal Operation Mode.

V Menu: Configure Outputs (4-20 mA and Digital Outputs)

Use the V menu to configure the analog and source/sink outputs. The flowchart in Figure 23 below gives an overview of the V menu programming.

Note: Press [ENTER] as required to loop through all numbered choices. You cannot exit a number loop (Select 1, Select 2, etc.) without making a valid number choice.

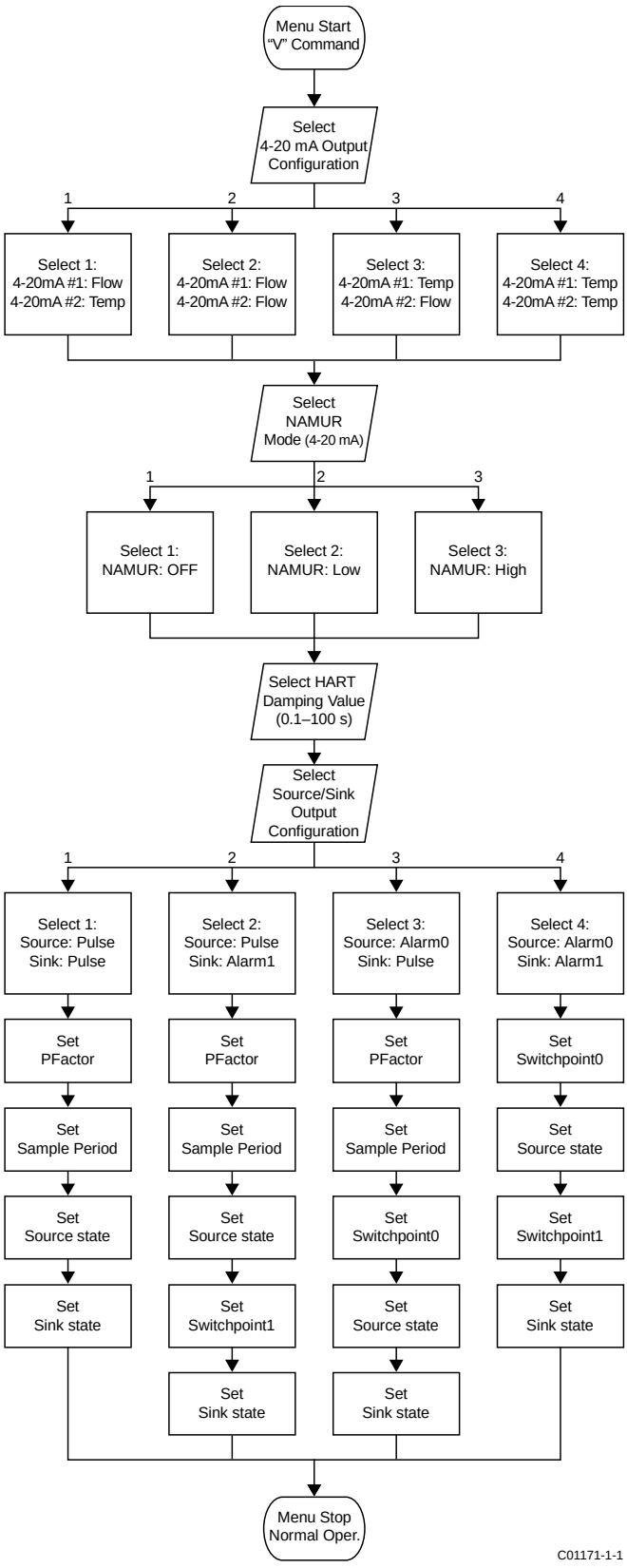

Figure 23 – V Menu Command Structure: Output Configuration Setup

4-20 mA Configuration

Flow/Temperature Assignment

Use the "V" menu to assign 4-20 mA current loop channels 1 and 2 to one of four flow/temperature configurations as required (see Figure 23). The default assignment is: Ch. 1 = Flow, Ch. 2 = Temp. Once the assignment is set or confirmed the "V" menu continues to NAMUR mode configuration.

Note: For HART use only: The *4-20mA #1* parameter must remain at its default assignment of flow to comply with the HART protocol. Do not change this assignment when using HART.

NAMUR Mode

The NAMUR feature globally drives the current loop to a predetermined state when a sensor fault is detected. NAMUR can be turned *OFF* (disabled, *default*), set *Low* (current loop driven to 3.6 mA on sensor fault) or set *High* (current loop driven to 21 mA on sensor fault). Once NAMUR is set or confirmed the "V" menu continues to HART Damping configuration.

HART Damping Value

The HART damping value configures the response time of the HART 4-20 mA output. The range is 0.1 second (no damping with update every 0.1 s, *default*) to 100 seconds (max. damping with update every 100 s). HART damping prevents rapid flow changes from affecting HART communications. HART damping can also be set via the CLI *DV* command (see CLI Commands, page 30). For most applications, the factory-set HART damping value can be left unchanged. Once HART Damping is set or confirmed the "V" menu continues to Digital Output Configuration.

Note: The HART damping configuration menu always displays whether or not the HART option is present. The damping value can be safely ignored on non-HART instruments since the setting has no effect on the output.

Source/Sink Output Configuration

ST51A/ST75A/ST75AV instruments provide a *source* output and a *sink* output.

- Source: The instrument supplies the DC voltage and current for the level output/pulse (22 V, 25 mA max.)
- Sink: The instrument accepts an external customer-supplied DC power source for the level output/pulse (40 V, 150 mA max.)

The source and sink outputs can either be a pulse signal or alarm (level) signal. For alarm configurations, the source output is dedicated to Alarm0 and the sink output is dedicated to Alarm1.

Source/Sink Output Functions

Use the source/sink outputs for the following functions.

- Alarm: A level signal is generated (from High to Low or Low to High, depending on the *Sink/Source state* configuration) when the flow crosses the corresponding SWITCH_point0 (for Alarm0) or SWITCH_point1 (for Alarm1) threshold (setpoint).
- Pulse: For pulse mode the user specifies a Pulse Factor and a Sample Period (0.5 to 5.0 seconds). Basically, each pulse represents 1 Pulse_Factor amount of flow in the current units. The pulses are clamped to 500 per second. The pulse output is well suited to being connected to a pulse counter where the counted pulses could be converted to display information similar to a gas station pump display. The length of the pulses is adjusted so that they fill a sample period, thus approximating a frequency output. There are, however, no distinct pulse mode types (counter/frequency/etc.) as only one mode is provided.

Source/Sink Output Programming Parameters

Use the "V" menu to set up the following source/sink output parameters:

- Pulse factor: Number of pulses per selected engineering unit. Default =1

  Example in NCMH:
  1 = 1 pulse per NCM
  0.1 = 1 pulse per 0.1 NCM (10 pulses per 1 NCM)
  10 = 1 pulse per 10 NCM
  Range pulse factor 0.001 – 1000

- Sample time: Time in seconds before calculating the next number of pulses.
- Sink/Source state: Sets the pulse/level output polarity: High to Low or Low to High.

- Switchpoint0/Switchpoint1: The setpoint at which the level output activates when configured for Alarm function. The programmed setpoint is in the same units as the measured flow or temperature.

For wiring details see Pulse Output and Alarm (Source/Sink, page 20.

Serial Interface Command Reference

Top Level Menu Commands

Table 8 below summarizes the single-letter, top level menu commands accessible via the serial interface (computer/FC88).

Note: Some top-level commands are *Factory Only* with special passcode protection. Contact the factory for details if your application requires use of these commands.

Table 8 – Top Level Menu Commands

Command Mnemonic	Command Function	Command Description
A	R	AvgDelta_R, AvgRef
B	R	Delta R, Ref R, Active R
C	R	Tcdelta_R, Ref_R
D	R	Diagnostics
F	R/W	KFactor
G[1]	R/W	Clear FlashEE, Boxcar Count, Calibration Changes, Sensor Cable Ohms Changes
I[1]	R	4-20 mA Forced Output: 0%, 25%, 50%, 75%, 100%
K[1]	R/W	Cal Parameters
L	R/W	Output Calibration
N	W	Warm Restart
Q	W	Escape Menu
R[1]	W	Factory Restore
S	R/W	Totalizer Menu On/Off
T	R	Normal Mode Operation
V	R/W	Output Configuration
W	R/W	Totalizer
X	R	Raw A to D Counts, Ref_R, Active_R
Y[1]	R/W	Command Line Interface
Z[2]	R/W	Flow Units, Output Scaling
P & U	—	Available in L menu; U (Up/Increment), P (Down/Decrement)

Notes: 1: Passcode = 357

2: See Z Menu: Configure Flow Units and 4-20 mA Output Scaling, page 25.

CLI Commands

Table 9 below summarizes the command line interface (CLI) commands accessible via the serial interface (computer/FC88).

Note: When invoking a CLI write function separate the command mnemonic and the data value with a space. All Read and Write Functions are completed by pressing [ENTER]. To exit CLI, press [ENTER] following the last Command [ENTER] (i.e., press [ENTER] twice). Refer also to Secondary Commands: CLI on page 24.

Examples:

RBK[ENTER] (Read Breakpoint)

WBK 2222 [ENTER] (Write Breakpoint 2222)

RC11 [ENTER] (Read Coefficient C1,1)

WC11 -234.567[ENTER] (Write Coefficient C1,1, -234.567)

Table 9 – List of CLI Commands

Command Mnemonic	Command Function	Command Description	Data Type
12	R/W	Coefficient_Array1-2	Float
13	R/W	Coefficient_Array1-3	Float
14	R/W	Coefficient_Array1-4	Float
15	R/W	Coefficient_Array1-5	Float
22	R/W	Coefficient_Array2-2	Float
23	R/W	Coefficient_Array2-3	Float
24	R/W	Coefficient_Array2-4	Float
25	R/W	Coefficient_Array2-5	Float
A[1-7]	R/W	Temp Comp, ACT_Tslope set	Float
AA	R	ADC ActR	Integer
AF	R/W	ActR Offset	Float
AR	R	ADC RefR	Integer
AS	R/W	ActR Slope	Float
AT	R/W	ADC IntTemp	Integer
AZ	R/W	ActR Ohm Adjust	Float
BK	R/W	Break Point	Float
BM	R/W	Boxcar Filter Max	Integer
C1	R/W	Coefficient_Array1-1	Float
C2	R/W	Coefficient_Array2-1	Float
CM[1]	R/W	Cminflow	Float
CR	R/W	Calibration Ref	Float
CX[1]	R/W	Cmaxflow	Float
DI	R	Diagnostics	Null
DM	R/W	DeltaR Minimum	Float
DN	R/W	Density	Float
DR	R	DeltaR	Float
DV	R/W	HART Damping Value	Float
DX	R/W	DeltaR Maximum	Float
EU[1]	R/W	Engineering Units	Enum
F0	R/W	Pulse Out State0	Enum
F1	R/W	Pulse Out State1	Enum
FF[1]	R/W	Flow Factor	Float
HC	R/W	Heater Current Adjust	Integer
HD	R/W	Heater DAC	Integer
HR	R/W	Tot Dump Hours Cntr	Integer
IL	R/W	IFactorLim	Float
K[1-4] [1]	R/W	K Factor 1–4	Float
L0[1]	R/W	Line Size0	Float
L1[1]	R/W	Line Size1	Float
MN	R/W	Minflow	Float
MO	R/W	Model#	Integer
MX	R/W	Maxflow	Float
NM	R/W	DeltaR NAMUR Min	Float

Command Mnemonic	Command Function	Command Description	Data Type
NN	R/W	NAMUR Mode	Enum
NX	R/W	DeltaR NAMUR Max	Float
O[1-7]	R/W	Temp Comp, ACT_Toffst set	Float
OM	R/W	Outmode	Enum
P0	R/W	Switch Point0	Integer
P1	R/W	Switch Point1	Integer
PC	R	PCDeltaR	Integer
PF	R/W	Pulse Factor	Float
PL	R/W	Pulse Out	Enum
PR[1]	R/W	% of Range	Boolean
PS	R/W	Pulse Sample period	Float
Q[1-7]	R/W	Temp Comp, REF_Toffst set	Float
R[1-7]	R/W	Temp Comp, REF_Tslope set	Float
RC	R/W	Ref Curve Adjust	Integer
RF	R/W	RefR Offset	Float
RO	R/W	RollOver Cntr	Long
RR	R	Reference R	Float
RS	R/W	RefR Slope	Float
RT	R/W	RTD_SLP_385	Boolean
RZ	R/W	RefR Ohm Adjust	Float
S0	R/W	SpanDAC0 for 4-20 mA #1	Integer
S2	W	Save FACTORY	N/A
S3	R/W	SpanDAC1 for 4-20 mA #2	Integer
SF	R	SFPS Flow	Float
SN	R/W	Serial Number	String (16 chars max)
SO	R/W	Shop Order Number	String (16 chars max)
T0	R/W	Tcslp0	Float
T2	R/W	Tcslp2	Float
T3	R/W	TSpanDAC0 for 4-20 mA #1	Integer
T5	R/W	TZeroDAC0 for 4-20 mA #1	Integer
T7	R/W	TSpanDAC1 for 4-20 mA #2	Integer
T8	R/W	TZeroDAC1 for 4-20 mA #2	Integer
TC	R	TCDeltaR	Float
TD	R/W	Tcslp	Float
TF	R/W	Totalizer ON/OFF Flag	Boolean
TM[1]	R/W	Cmintemp	Float
TP[1]	R/W	Totalizer Temperature Flag	Boolean
TR	R	ActR	Float
TT	R/W	Totalizer Value	Float
TU	R/W	Totalizer Menu	Boolean
TX[1]	R/W	Cmaxtemp	Float
TZ	R	Temperature	Float
UF	R	User Flow	Float
UK	R	User FlowK	Float
UN	R/W	User Name	String (16 chars max)
VN	R	Version Number	String (16 chars max)
XX	R/W	Test Flow Rate ON (SFPS)	Float
XY	W	Test Flow Rate OFF	Float
Z0	R/W	ZeroDAC0 for 4-20 mA #1	Integer
Z2	R/W	ZeroDAC1 for 4-20 mA #2	Integer

Note: 1. This command is passcode protected if the totalizer is enabled. Contact the factory for details if your application requires use of this command.

HART Operation

HART (Highway Addressable Remote Transducer) is a communication protocol that superimposes a low level digital data signal on a 4-20 mA current loop. The primary function of the instrument's HART interface is to present process data via process data commands 1, 3 and 9.

The ST51A/ST75A/ST75AV does not implement the HART Burst mode. A HART master that supports HART 7.0 and higher is required. If using a HART communicator, a unit that supports HART 7.0 or higher is required (i.e. Emerson 475 Communicator). Connect the installation (factory/plant) HART wiring to the instrument as described in HART Connection, page 19.

Process Data Operation

The ST51A/ST75A/ST75AV implements HART 7.0 while maintaining compatibility with earlier versions of the HART protocol. However, HART commands 1 and 3 have been simplified to only report the primary variable Flow. Use command 9 to access the full suite of available dynamic variables including temperature, totalizer, and others.

ST51A/ST75A/ST75AV HART Process Data Organization

This section describes how the instrument process data is organized under the HART command 9. For details on command 9 see the HART Specification "Universal Commands Specification" HCF_SPEC-127, Revision 7.1 and the command 9 description on page 38.

ST51A/ST75A/ST75AV Process Variable Slots

Table 10 below lists the instrument's 6 process variables that are read by HART command 9, with each process variable assigned a slot number.

Not all the variables described in this section are available in all configurations of the flow meter. For example, the Flow Totalizer may be turned ON or OFF.

The process variables include 3 flow classes or types of which only one class of flow is active at a time.

Table 10 – ST51A/ST75A/ST75AV HART Process Variables

Slot #	Process Variable	HART Variable Code Description	Device Variable Code	Device Variable Classification
0	Volumetric Flow[1]	Primary Variable	0	66
1	Volume (Totalizer)	Secondary Variable	1	68
2	Mass Flow[1]	Primary Variable	2	72
3	Mass (Totalizer)	Secondary Variable	3	71
4	Velocity Flow[1]	Primary Variable	4	67
5	Temperature	Tertiary Variable	5	64

Note: 1. Only one active at a time.

Primary Variable Classifications

The instrument can provide flow data in unit types that span several HART classifications. Commands 50 and 51 are used to read and set, respectively, which flow variable will be mapped to the primary variable. The PV *device variable classification* can only be one of the following:

- 0: Volumetric Flow
- 2: Mass Flow
- 4: Velocity Flow

Since only PV is used in this manner, command 50 returns 250 for SV, TV, and QV. The setting of the *device variable classification* determines which class of flow-related variables is valid, and therefore displayed as implemented when variable slots are read by command 9.

Device Description Files

A Device Description (DD) file lets the HART handheld or host software application fully configure any HART device for which it has a DD installed. The ST51A/ST75A/ST75AV DD files are available for download (*pending*) from the HART Communication Foundation website:

http://www.hartcommproduct.com/inventory2/index.php?action=list

Browse by Member (*FCI – Fluid Components International*) to find the instrument's files under device type: a67e (ST50 product family)

Refer to the following HART Communication Foundation web page for guidelines on using a DD file:

http://www.hartcommproduct.com/using_dd.html

Table 11 below summarizes the instrument's HART Communication Foundation device registration information.

Table 11 – ST51A/ST75A/ST75AV HART Device Registration Information

Product Name	Product Type	HART Version	Mfgr. ID	Device Type	Device Revision
ST50 product family	Flow	7	0000A6	0xA67E	01

EDDL Files

The ST Series EDDL (Electronic Device Description Language) files are support files that provide an extended description of each object in the Virtual Field Device (VFD), and provide information needed for a control system or host to understand the meaning of the data in the VFD including the human interface. The EDDL file can be thought as a "driver" for the device.

FCI provides two types of files: the standard EDDL files, and the Emerson 375 and 475 Communicator DD files.

Loading the DD Files to the 475 Field Communicator

Use the "Easy Upgrade Utility" from EMERSON to load the DDPs into the Field Communicator. Below is the procedure for how to load DD files into the 475-Field communicator.

Open the **Field Communicator Easy Upgrade Utility** program and click *Utilities* on the left hand menu. Select *Import DDs from a local source*. Then select the FCI files from the resulting List dialog and click on OK. See Figure 24 below.

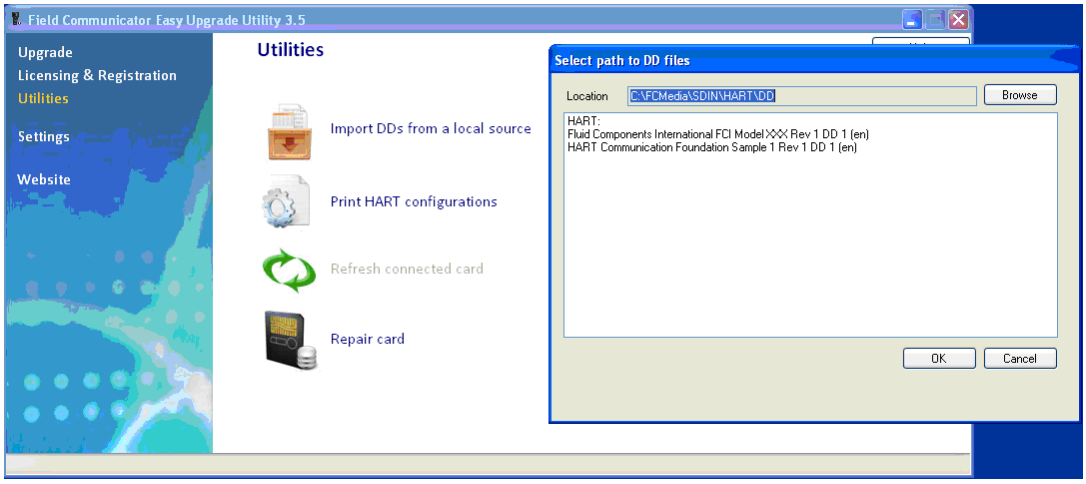

Figure 24 – Field Communicator Easy Upgrade Utility, Import DD

Service Data Operation

The Service Data functions are organized into 3 areas:

1. ST51 Product Family Basic Setup
2. ST51 Product Family Configuration
3. ST51 Product Family Factory Calibration Limits

Shown below is service information as seen through the Emerson 475 HART communicator with FCI's DD files loaded. The same information seen by the 475 is shown in the DCS (Distributed Control System) when the ST51 Product Family HART DD files are loaded.

ST51 Product Family Basic Setup

The Basic Setup function lets you review and change the engineering units of the process variables, review and change the Plenum or pipe size, enable or disable the Totalizer, review and change device information, reset the operation of the ST51A/ST75A/ST75AV to the factory settings, review and change PV Setup and review and change K Factors.

Engineering Units Information

Plenum

The ST51A/ST75A/ST75AV Plenum function lets you review and edit the plenum data that have been set.

Totalizer

The ST51A/ST75A/ST75AV Totalizer function lets you turn the totalizer ON or OFF.

Factory Reset

WARNING – The factory Reset command re-loads the configuration and calibration parameters that were loaded into the instrument during the original calibration and setup. Any changes made to the configuration of calibration parameters will be lost when the Factory Reset command is executed.

ST51 Product Family Calibration Limits (Example)

The ST51A/ST75A/ST75AV Calibration Limits function lets you review the limits that have been set for the Flow and Temperature process parameters.

HART Command List Reference

The HART commands are divided into three classes.

- Universal Commands
- Common Practice Commands
- Device Specific Commands

Barring no communication error, a field or slave device returns a response code as part of the 2-byte status response to a command. Refer to Command Status Bytes on page 52. The ST51A/ST75A/ST75AV response codes listed in the following command summaries are a subset of the response codes listed in the HART specification.

ST51A/ST75A/ST75AV HART Universal Commands

The ST51A/ST75A/ST75AV HART supports Universal Commands 0 through 22 and 38 and 48. Commands 4 and 5 are reserved under Universal Command Specification Rev. 7.1 (HCF_SPEC-127, Revision 7.1) and not implemented in this specification. There is no HART command 10. Table 12 below summarizes the instrument's HART Universal command set and the data associated with each command.

Table 12 – HART Universal Commands

Command 0: Read Unique Identifier			
	Byte	Format	Description
Request Data Bytes	None		
Response Data Bytes	0	Unsigned-8	254
	1–2	Enum	Expanded Device Type
	3	Unsigned-8	Minimum number of preambles from master to slave
	4	Unsigned-8	HART Protocol Revision Number: 7
	5	Unsigned-8	Device Revision Number
	6	Unsigned-8	Software Revision Number
	7	Unsigned-5	(Most Significant 5 Bits) Hardware Revision Level: 1
	7	Enum	Physical Signaling Code: 00 = Bell 202 Current (4-20 mA)
	8	Bits	Flags: 01 = Multisensor
	9–11	Unsigned-24	Device ID
	12	Unsigned-8	Minimum number of preambles from the slave to master
	13	Unsigned-8	Maximum Number of Device Variables
	14–15	Unsigned-16	Configuration Change Counter
	16	Bits	Extended Field Device Status
	17–18	Enum	Manufacturer ID Code: 166_{DEC}/$00A6_{HEX}$ (FCI)
	19–20	Enum	Private Label Distributor Code
	21	Enum	Device Profile = 1 "HART Process Automation Device"
	Code	Class	Description
Response Codes	0	Success	No Command-Specific Errors
	1–127		Undefined

Command 1: Read Primary Variable (Flow Units, & Flow Value)			
	Byte	Format	Description
Request Data Bytes	None		
Response Data Bytes	0	Enum	Primary Variable Units Code
	1–4	Float	Primary Variable Value
	Code	Class	Description
Response Codes	0	Success	No Command-Specific Errors
	1–127		Undefined

Command 2: Read Primary Variable Loop Current and Percent of Range			
	Byte	Format	Description
Request Data Bytes	None		
Response Data Bytes	0–3	Float	Primary Variable Loop Current (mA)
	4–7	Float	Primary Variable Percent of Range (%)
	Code	Class	Description
Response Codes	0	Success	No Command-Specific Errors
	1–127		Undefined

Command 3: Read Dynamic Variable (Flow) and Loop Current			
	Byte	Format	Description
Request Data Bytes	None		
Response Data Bytes	0–3	Float	PV Loop Current: 4-20 mA
	4	Enum	PV HART Unit Code, Flow
	5–8	Float	PV Flow Value
	Code	Class	Description
Response Codes	0	Success	No Command-Specific Errors
	1–127		Undefined

Command 6: Write Polling Address			
	Byte	Format	Description
Request Data Bytes	0	Unsigned-8	Polling Address of Device
	1	Enum	Loop Current Mode
Response Data Bytes	0	Unsigned-8	Polling Address of Device
	1	Enum	Loop Current Mode
	Code	Class	Description
Response Codes	0	Success	No Command-Specific Errors
	1		Undefined
	2	Error	Invalid Poll Address Selection
	3–11		Undefined
	12	Error	Invalid Mode Selection
	13–127		Undefined

Command 7: Read Loop Configuration			
	Byte	Format	Description
Request Data Bytes	None		
Response Data Bytes	0	Unsigned-8	Polling Address of Device
	1	Enum	Loop Current Mode
	Code	Class	Description
Response Codes	0	Success	No Command-Specific Errors
	1–127		Undefined

Command 8: Read Dynamic Variable Classifications			
	Byte	Format	Description
Request Data Bytes	None		
Response Data Bytes	0	Enum	Primary Variable Classification
	1	Enum	Secondary Variable Classification
	2	Enum	Tertiary Variable Classification
	3	Enum	Quaternary Variable Classification
	Code	Class	Description
Response Codes	0	Success	No Command-Specific Errors
	1–127		Undefined

Command 9: Read Device Variables with Status[1]			
	Byte	Format	Description
Request Data Bytes	0	Unsigned-8	Slot 0: Device Variable Code
	1	Unsigned-8	Slot 1: Device Variable Code
	2	Unsigned-8	Slot 2: Device Variable Code
	3	Unsigned-8	Slot 3: Device Variable Code
	4	Unsigned-8	Slot 4: Device Variable Code
	5	Unsigned-8	Slot 5: Device Variable Code
	6	Unsigned-8	Slot 6: Device Variable Code
	7	Unsigned-8	Slot 7: Device Variable Code
Response Data Bytes	0	Bits	Extended Field Device Status
	1	Unsigned-8	Slot 0: Device Variable Code
	2	Enum	Slot 0: Device Variable Classification
	3	Enum	Slot 0: Units Code
	4–7	Float	Slot 0: Device Variable Value
	8	Bits	Slot 0: Device Variable Status
	9	Unsigned-8	Slot 1: Device Variable Code
	10	Enum	Slot 1: Device Variable Classification
	11	Enum	Slot 1: Units Code
	12–15	Float	Slot 1: Device Variable Value
	16	Bits	Slot 1: Device Variable Status
	17	Unsigned-8	Slot 2: Device Variable Code
	18	Enum	Slot 2: Device Variable Classification
	19	Enum	Slot 2: Units Code
	20–23	Float	Slot 2: Device Variable Value
	24	Bits	Slot 2: Device Variable Status
	25	Unsigned-8	Slot 3: Device Variable Code
	26	Enum	Slot 3: Device Variable Classification
	27	Enum	Slot 3: Units Code
	28–31	Float	Slot 3: Device Variable Value
	32	Bits	Slot 3: Device Variable Status

Command 9: Read Device Variables with Status (Continued)			
Response Data Bytes (continued)	33	Unsigned-8	Slot 4: Device Variable Code
	34	Enum	Slot 4: Device Variable Classification
	35	Enum	Slot 4: Units Code
	36–39	Float	Slot 4: Device Variable Value
	40	Bits	Slot 4: Device Variable Status
	41	Unsigned-8	Slot 5: Device Variable Code
	42	Enum	Slot 5: Device Variable Classification
	43	Enum	Slot 5: Units Code
	44–47	Float	Slot 5: Device Variable Value
	48	Bits	Slot 5: Device Variable Status
	49	Unsigned-8	Slot 6: Device Variable Code
	50	Enum	Slot 6: Device Variable Classification
	51	Enum	Slot 6: Units Code
	52–55	Float	Slot 6: Device Variable Value
	56	Bits	Slot 6: Device Variable Status
	57	Unsigned-8	Slot 7: Device Variable Code
	58	Enum	Slot 7: Device Variable Classification
	59	Enum	Slot 7: Units Code
	60–63	Float	Slot 7: Device Variable Value
	64	Bits	Slot 7: Device Variable Status
	65–68	Time	Slot 0: Data Time Stamp
	Code	Class	Description
Response Codes	0	Success	No Command-Specific Errors
	1–127		Undefined

Note: 1. Command 9 takes in a variable list of parameters and similarly returns a variable length response.

Command 11: Read Unique Identifier Associated with Tag			
	Byte	Format	Description
Request Data Bytes	0–5	Packed	Tag, Packed ASCII
Response Data Bytes	0	Unsigned-8	254
	1–2	Enum	Expanded Device Type
	3	Unsigned-8	Minimum number of preambles from master to slave
	4	Unsigned-8	HART Protocol Revision Number: 7
	5	Unsigned-8	Device Revision Number
	6	Unsigned-8	Software Revision Number
	7	Unsigned-5	(Most Significant 5 Bits) Hardware Revision Level: 1
	7	Enum	Physical Signaling Code: 00 = Bell 202 Current (4-20 mA)
	8	Bits	Flags: 01 = Multisensor
	9–11	Unsigned-24	Device ID
	12	Unsigned-8	Minimum number of preambles from the slave to master
	13	Unsigned-8	Maximum Number of Device Variables
	14–15	Unsigned-16	Configuration Change Counter
	16	Bits	Extended Field Device Status
	17–18	Enum	Manufacturer ID Code: $166_{DEC}/00A6_{HEX}$ (FCI)
	19–20	Enum	Private Label Distributor Code
	21	Enum	Device Profile = 1 “HART Process Automation Device”
	Code	Class	Description
Response Codes	0	Success	No Command-Specific Errors
	1–127		Undefined

Command 12: Read Message Contained Within Device			
	Byte	Format	Description
Request Data Bytes	None		
Response Data Bytes	0–11	Bitstring	Device ID No.
	Code	Class	Description
Response Codes	0	Success	No Command-Specific Errors
	1–127		Undefined

Command 13: Read Tag, Descriptor, Date			
	Byte	Format	Description
Request Data Bytes	None		
Response Data Bytes	0–5	Packed	Tag
	6–17	Packed	Descriptor
	18–20	Date	Date Code: Day, Month, Year
	Code	Class	Description
Response Codes	0	Success	No Command-Specific Errors
	1–127		Undefined

Command 14: Read Primary Variable (Flow) Transducer Information			
	Byte	Format	Description
Request Data Bytes	None		
Response Data Bytes	0–2	Unsigned-24	Transducer Serial Number
	3	Enum	Transducer Limits and Minimum Span Units Code
	4–7	Float	Upper Transducer Limit
	8–11	Float	Lower Transducer Limit
	12–15	Float	Minimum Span
	Code	Class	Description
Response Codes	0	Success	No Command-Specific Errors
	1–127		Undefined

Command 15: Read Device Information			
	Byte	Format	Description
Request Data Bytes	None		
Response Data Bytes	0	Enum	Flow Alarm Selection Code
	1	Enum	Flow Transfer Function Code (not supported)
	2	Enum	Flow Upper and Lower Range Value Units Code
	3–6	Float	Flow Upper Range Value
	7–10	Float	Flow Lower Range Value
	11–14	Float	Flow Damping Value[1]
	15	Enum	Write Protect Code (not supported)
	16	Enum	Reserved
	17	Bits	Flow Analog Channel Flags (not supported)
	Code	Class	Description
Response Codes	0	Success	No Command-Specific Errors
	1–127		Undefined

Note: 1. Refer to HART Damping Value on page 28 for details on flow damping within HART. The damping value can only be adjusted using the serial interface “V” command or the CLI “DV” command.

Command 16: Read Final Assembly Number			
	Byte	Format	Description
Request Data Bytes	None		
Response Data Bytes	0–2	Unsigned-24	Final Assembly No.
	Code	Class	Description
Response Codes	0	Success	No Command-Specific Errors
	1–127		Undefined

Command 17: Write Message Into Device			
	Byte	Format	Description
Request Data Bytes	0–23	Packed	Message String Used by Master
Response Data Bytes[1]	0–23	Packed	Message String
	Code	Class	Description
Response Codes	0	Success	No Command-Specific Errors
	1–127		Undefined

Note: 1. The value returned in the response data bytes reflects the value actually used by the field device.

Command 18: Write Tag, Descriptor, Date			
	Byte	Format	Description
Request Data Bytes	0–5	Packed	Tag
	6–17	Packed	Descriptor Used by Master
	18–20	Date	Date Code Used by Master
Response Data Bytes[1]	0–5	Packed	Tag
	6–17	Packed	Descriptor
	18–20	Date	Date Code: Day, Month, Year
	Code	Class	Description
Response Codes	0	Success	No Command-Specific Errors
	1–127		Undefined

Note: 1. The value returned in the response data bytes reflects the value actually used by the field device.

Command 19: Write Final Assembly Number			
	Byte	Format	Description
Request Data Bytes	0–2	Unsigned-24	Final Assembly No.
Response Data Bytes[1]	0–2	Unsigned-24	Final Assembly No.
	Code	Class	Description
Response Codes	0	Success	No Command-Specific Errors
	1–127		Undefined

Note: 1. The value returned in the response data bytes reflects the value actually used by the field device.

Command 20: Read Long Tag			
	Byte	Format	Description
Request Data Bytes	None		
Response Data Bytes	0–31	Latin-1	Long Tag
	Code	Class	Description
Response Codes	0	Success	No Command-Specific Errors
	1–127		Undefined

Command 21: Read Unique Identifier Associated with Long Tag			
	Byte	Format	Description
Request Data Bytes	0–31	Latin-1	Long Tag
Response Data Bytes	0	Unsigned-8	254
	1–2	Enum	Expanded Device Type
	3	Unsigned-8	Minimum Number Of Preambles From Master to Slave
	4	Unsigned-8	HART Protocol Revision Number: 7
	5	Unsigned-8	Device Revision Number
	6	Unsigned-8	Software Revision Number
	7	Unsigned-5	(Most Significant 5 Bits) Hardware Revision Level: 1
	7	Enum	Physical Signaling Code: 00 = Bell 202 Current (4-20 mA)
	8	Bits	Flags: 01 = Multisensor
	9–11	Unsigned-24	Device ID
	12	Unsigned-8	Minimum Number Of Preambles From Slave to Master
	13	Unsigned-8	Maximum Number of Device Variables
	14–15	Unsigned-16	Configuration Change Counter
	16	Bits	Extended Field Device Status
	17–18	Enum	Manufacturer ID Code: 166_{DEC}/$00A6_{HEX}$ (FCI)
	19–20	Enum	Private Label Distributor Code
	21	Enum	Device Profile = 1 “HART Process Automation Device”
	Code	Class	Description
Response Codes	0	Success	No Command-Specific Errors
	1–127		Undefined

Command 22: Write Long Tag			
	Byte	Format	Description
Request Data Bytes	0–31	Latin-1	Long Tag
Response Data Bytes	0–31	Latin-1	Long Tag
	Code	Class	Description
Response Codes	0	Success	No Command-Specific Errors
	1–127		Undefined

Command 38: Reset Configuration Changed Flag			
	Byte	Format	Description
Request Data Bytes	0–1	Unsigned-16	Configuration Change Counter
Response Data Bytes	0–1	Unsigned-16	Configuration Change Counter
	Code	Class	Description
Response Codes	0	Success	No Command-Specific Errors
	1–4		Undefined
	5	Error	Too Few Data Bytes Received
	6–8		Undefined
	9	Error	Configuration Change Counter Mismatch
	10–127		Undefined

Command 48: Read Additional Device Status			
	Byte	Format	Description
Request Data Bytes	0–5	Bits	Device-Specific Status (only first 2 bytes used, see page 53 for additional info)
	6	Bits	Extended Device Status. Normally “0”; set to “1” (0x01) if maintenance is required.
	7	Bits	Device Operating Mode (not used, bit cleared to 0)
	8	Bits	Standardized Status 0 (not used, bit cleared to 0)
	9	Bits	Standardized Status 1 (not used, bit cleared to 0)
	10	Bits	Analog Channel Saturated (not used, bit cleared to 0)
	11	Bits	Standardized Status 2 (not used, bit cleared to 0)
	12	Bits	Standardized Status 3 (not used, bit cleared to 0)
	13	Bits	Analog Channel Fixed
	14–24	Bits	Device-Specific Status2 (not used, bit cleared to 0)
Response Data Bytes	0–5	Bits	Device-Specific Status (only first 2 bytes used, see page 53)
	6	Bits	Extended Device Status. Normally “0”; set to “1” (0x01) if maintenance is required.
	7	Bits	Device Operating Mode (not used, bit cleared to 0)
	8	Bits	Standardized Status 0 (not used, bit cleared to 0)
	9	Bits	Standardized Status 1 (not used, bit cleared to 0)
	10	Bits	Analog Channel Saturated (not used, bit cleared to 0)
	11	Bits	Standardized Status 2 (not used, bit cleared to 0)
	12	Bits	Standardized Status 3 (not used, bit cleared to 0)
	13	Bits	Analog Channel Fixed
	14–24	Bits	Device-Specific Status2 (not used, bit cleared to 0)
	Code	Class	Description
Response Codes	0	Success	No Command-Specific Errors
	1–4		Undefined
	5	Error	Too Few Data Bytes Received
	6–13		Undefined
	14	Warning	Status Bytes Mismatch
	15–127		Undefined

ST51A/ST75A/ST75AV HART Common Practice Commands

The ST51A/ST75A/ST75AV supports Common Practice commands 35, 40, 42, 44, 45, 46, 50 and 51. Table 13 below summarizes the instrument's HART Common Practice command set and the data associated with each command.

Table 13 – HART Common Practice Commands

Command 35: Write Primary Variable (PV) Range Values			
	Byte	Format	Description
Request Data Bytes	0	Unsigned-8	PV Upper and Lower Range Values Units Code
	1–4	Float	PV Upper Range Value (Customer Max. Flow Limit)
	5–8	Float	PV Lower Range Value (Customer Min. Flow Limit)
Response Data Bytes[1]	0	Unsigned-8	PV Upper and Lower Range Values Units Code
	1–4	Float	PV Upper Range Value
	5–8	Float	PV Lower Range Value
	Code	Class	Description
Response Codes	0	Success	No Command-Specific Errors
	1–8		Undefined
	9	Error	Lower Range Value Too High
	10	Error	Lower Range Value Too Low
	11	Error	Upper Range Value Too High
	12	Error	Upper Range Value Too Low
	13–17	Error	Upper and Lower Range Values Out Of Limits
	18	Error	Invalid Units Code
	19–28		Undefined
	29	Error	Invalid Span
	30–127		Undefined

Note: 1. The value returned in the response data bytes reflects the rounded or truncated value actually used by the device.

Command 40: Enter/Exit Fixed Current Mode			
	Byte	Format	Description
Request Data Bytes[1]	0–3	Float	PV Fixed Current Level (mA units); "0" to Exit Fixed Current
Response Data Bytes	0–3	Float	Actual PV Current Level
	Code	Class	Description
Response Codes	0	Success	No Command-Specific Errors
	1–2		Undefined
	3	Error	Passed Parameter Too Large
	4	Error	Passed Parameter Too Small
	5–10		Undefined
	11	Error	Loop Current Not Active (Device in Multidrop Mode)
	12–127		Undefined

Notes: 1. Specify a value (in mA) to drive Ch. 1 to a particular output value. Specify "0" to exit the fixed current mode.

Command 42: Perform Device Reset (Soft Reset of Flow Meter)[1]			
	Byte	Format	Description
Request Data Bytes	None		
Response Data Bytes	None		
	Code	Class	Description
Response Codes	None		

Note: 1. Send Command 42 (no data) to reset the instrument. No response is returned due to reboot.

Command 44: Write Primary Variable Units			
	Byte	Format	Description
Request Data Bytes	0	Enum	PV Units Code
Response Data Bytes[1]	0	Enum	PV Units Code
	Code	Class	Description
Response Codes	0	Success	No Command-Specific Errors
	1		Undefined
	2	Error	Invalid Selection
	3–127		Undefined

Note: 1. The value returned in the response data bytes reflects the value actually used by the device.

Command 45: Trim DAC Zero – Measured Current Chan #1 (in mA)			
	Byte	Format	Description
Request Data Bytes	0–3	Float	Ext. Measured Current Ch. #1 Level (mA units)
Response Data Bytes[1]	0–3	Float	Actual Measured Current Ch. #1 Level (mA units)
	Code	Class	Description
Response Codes	0	Success	No Command-Specific Errors
	1–2		Undefined
	3	Error	Passed Parameter Too Large
	4	Error	Passed Parameter Too Small
	5–8		Undefined
	9	Error	Incorrect Loop Current Mode or Value
	10		Undefined
	11	Error	Loop Current Not Active (Device in Multidrop mode)
	12–127		Undefined

Note: 1. The value returned in the response data bytes reflects the rounded or truncated value actually used by the device.

Command 46: Trim DAC Gain – Measured Current Chan #1 (in mA)			
	Byte	Format	Description
Request Data Bytes	0–3	Float	Ext. Measured Current Ch. #1 Level (mA units)
Response Data Bytes[1]	0–3	Float	Actual Measured Current Ch. #1 Level (mA units)
	Code	Class	Description
Response Codes	0	Success	No Command-Specific Errors
	1–2		Undefined
	3	Error	Passed Parameter Too Large
	4	Error	Passed Parameter Too Small
	5–8		Undefined
	9	Error	Incorrect Loop Current Mode or Value
	10		Undefined
	11	Error	Loop Current Not Active (Device in Multidrop mode)
	12–127		Undefined

Note: 1. The value returned in the response data bytes reflects the rounded or truncated value actually used by the device.

Command 50: Read Dynamic Variable Assignments			
	Byte	Format	Description
Request Data Bytes	None		
Response Data Bytes	0	Unsigned-8	Device Variable assigned to the primary variable.
	1	Unsigned-8	Device Variable assigned to the secondary variable.
	2	Unsigned-8	Device Variable assigned to the tertiary variable.
	3	Unsigned-8	Device Variable assigned to the quaternary variable.
	Code	Class	Description
Response Codes	0	Success	No Command-Specific Errors
	1–127		Undefined

Command 51: Write Dynamic Variable Assignments			
	Byte	Format	Description
Request Data Bytes	0	Unsigned-8	Device Variable assigned to the primary variable.
	1	Unsigned-8	Device Variable assigned to the secondary variable.
	2	Unsigned-8	Device Variable assigned to the tertiary variable.
	3	Unsigned-8	Device Variable assigned to the quaternary variable.
Response Data Bytes[1]	0	Unsigned-8	Device Variable assigned to the primary variable.
	1	Unsigned-8	Device Variable assigned to the secondary variable.
	2	Unsigned-8	Device Variable assigned to the tertiary variable.
	3	Unsigned-8	Device Variable assigned to the quaternary variable.
	Code	Class	Description
Response Codes	0	Success	No Command-Specific Errors
	1		Undefined
	2	Error	Invalid Selection
	3–127		Undefined

Note: 1. The value returned in the response data bytes reflects the value actually used by the device.

ST51A/ST75A/ST75AV HART Device Specific Commands

In the HART protocol all commands defined as Manufacturer Specific, or Device Specific start at command 128. Use the device specific commands to setup and configure the ST51A/ST75A/ST75AV instrument via HART.

Table 14 below summarizes the instrument's HART Device Specific command set and the data associated with each command.

Table 14 – HART Device Specific Commands

Command 137: Read Totalizer And Rollover Values			
	Byte	Format	Description
Request Data Bytes	None		
Response Data Bytes	0–3	Float	Totalizer
	4–7	Integer	Rollover
	Code	Class	Description
Response Codes	0	Success	No Command-Specific Errors
	1–127		Undefined

Command 138: Read Totalizer State			
	Byte	Format	Description
Request Data Bytes	None		
Response Data Bytes	0	Unsigned-8	Totalizer State: 0 = OFF; 1 = ON
	Code	Class	Description
Response Codes	0	Success	No Command-Specific Errors
	1–127		Undefined

Command 139: Write Totalizer State			
	Byte	Format	Description
Request Data Bytes	0	Unsigned-8	Totalizer State: 0 = OFF; 1 = ON
Response Data Bytes	0	Unsigned-8	Totalizer State: 0 = OFF; 1 = ON
	Code	Class	Description
Response Codes	0	Success	No Command-Specific Errors
	1		Undefined
	2	Error	Invalid Selection
	3–127		Undefined

Command 140: Read Device Information			
	Byte	Format	Description
Request Data Bytes	None		
Response Data Bytes	0–9	Bits	Device CO
	10–19	Bits	Device Serial Number
	19–22	Bits	Device Software Version
	Code	Class	Description
Response Codes	0	Success	No Command-Specific Errors
	1–127		Undefined

Command 141: Write Totalizer Reset			
	Byte	Format	Description
Request Data Bytes	0–1	Unsigned-16	Reset Key = 0xABCD
Response Data Bytes	0–1	Unsigned-16	Reset Key = 0xABCD
	10–19	Bits	Device Serial Number
	19–22	Bits	Device Software Version
	Code	Class	Description
Response Codes	None		

Command 145: Read Customer Engineering Units			
	Byte	Format	Description
Request Data Bytes	None		
Response Data Bytes	0	Unsigned-8	Units Code for Flow
	1	Unsigned-8	Units Code for Temperature
	2	Unsigned-8	Units Code for Totalizer
	Code	Class	Description
Response Codes	0	Success	No Command-Specific Errors
	1–127		Undefined

Command 146: Write Customer Flow Units			
	Byte	Format	Description
Request Data Bytes	0	Unsigned-8	Units Code for Flow
Response Data Bytes	0	Unsigned-8	Units Code for Flow
	Code	Class	Description
Response Codes	0	Success	No Command-Specific Errors
	1		Undefined
	2	Error	Invalid Selection
	3–127		Undefined

Command 148: Read Plenum Information (Pipe Size)			
	Byte	Format	Description
Request Data Bytes	None		
Response Data Bytes	0-3	Float	Pipe Height Value
	4–7	Float	Pipe Width (Diameter) Value
	8	Unsigned-8	Plenum Units Code
	Code	Class	Description
Response Codes	0	Success	No Command-Specific Errors
	1–127		Undefined

Command 149: Write Plenum Information (Pipe Size)			
	Byte	Format	Description
Request Data Bytes	0–3	Float	Pipe Height Value
	4–7	Float	Pipe Width (Diameter) Value
	8	Unsigned-8	Plenum Units Code
Response Data Bytes	0-3	Float	Pipe Height Value
	4–7	Float	Pipe Width (Diameter) Value
	8	Unsigned-8	Plenum Units Code
	Code	Class	Description
Response Codes	0	Success	No Command-Specific Errors
	1		Undefined
	2	Error	Invalid Selection
	3–127		Undefined

Command 151: Read Calibration Flow Limits			
	Byte	Format	Description
Request Data Bytes	None		
Response Data Bytes	0–3	Float	Flow Lower Limit Value
	4–7	Float	Flow Upper Limit Value
	Code	Class	Description
Response Codes	0	Success	No Command-Specific Errors
	1–127		Undefined

Command 152: Write Calibration Flow Limits			
	Byte	Format	Description
Request Data Bytes	0–3	Float	Flow Lower Limit Value
	4–7	Float	Flow Upper Limit Value
Response Data Bytes	0–3	Float	Flow Lower Limit Value
	4–7	Float	Flow Upper Limit Value
	Code	Class	Description
Response Codes	0	Success	No Command-Specific Errors
	1–8		Undefined
	9	Error	Lower Range Value Too High
	10	Error	Lower Range Value Too Low
	11	Error	Upper Range Value Too High
	12	Error	Upper Range Value Too Low
	13–28		Undefined
	29	Error	Invalid Span
	30–127		Undefined

Command 153: Read Calibration Temperature Limits			
	Byte	Format	Description
Request Data Bytes	None		
Response Data Bytes	0–3	Float	Temperature Lower Limit Value
	4–7	Float	Temperature Upper Limit Value
	Code	Class	Description
Response Codes	0	Success	No Command-Specific Errors
	1–127		Undefined

Command 154: Write Calibration Temperature Limits			
	Byte	Format	Description
Request Data Bytes	None		
Response Data Bytes	0–3	Float	Temperature Lower Limit Value
	4–7	Float	Temperature Upper Limit Value
	Code	Class	Description
Response Codes	0	Success	No Command-Specific Errors
	1–8		Undefined
	9	Error	Lower Range Value Too High
	10–28		Undefined
	29	Error	Invalid Span
	30–127		Undefined

Command 155: Read KFactors			
	Byte	Format	Description
Request Data Bytes	None		
Response Data Bytes	0–3	Float	KFactor1
	4–7	Float	KFactor2
	8–11	Float	KFactor3
	12–15	Float	KFactor4
	Code	Class	Description
Response Codes	0	Success	No Command-Specific Errors
	1–127		Undefined

Command 156: Write KFactors			
	Byte	Format	Description
Request Data Bytes	0–3	Float	KFactor1
	4–7	Float	KFactor2
	8–11	Float	KFactor3
	12–15	Float	KFactor4
Response Data Bytes	0–3	Float	KFactor1
	4–7	Float	KFactor2
	8–11	Float	KFactor3
	12–15	Float	KFactor4
	Code	Class	Description
Response Codes	0	Success	No Command-Specific Errors
	1–127		Undefined

Command 159: Write Factory Restore			
	Byte	Format	Description
Request Data Bytes[1]	0	Unsigned-8	0x00 for Factory Restore
Response Data Bytes	0	Unsigned-8	0x00 for Factory Restore
	Code	Class	Description
Response Codes	0	Success	No Command-Specific Errors
	1		Undefined
	2	Error	Invalid Selection
	3–127		Undefined

Note: 1. Send Command 159 with a "0" byte to reload the instrument's factory default programming.

Command 160: Read Secondary Output Current Mode			
	Byte	Format	Description
Request Data Bytes	None		
Response Data Bytes	0–1	Word	Ch2 4-20 mA Source (1 = Flow, 2 = Temperature)
	Code	Class	Description
Response Codes	0	Success	No Command-Specific Errors
	1–127		Undefined

Command 161: Write Secondary Output Current Mode			
	Byte	Format	Description
Request Data Bytes	0–1	Word	Ch2 4-20 mA Source (1 = Flow, 2 = Temperature)
Response Data Bytes	0–1	Word	Ch2 4-20 mA Source (1 = Flow, 2 = Temperature)
	Code	Class	Description
Response Codes	0	Success	No Command-Specific Errors
	1–127		Undefined

Command 162: Enter/Exit Ch2 Fixed Current Mode (in mA)			
	Byte	Format	Description
Request Data Bytes[1]	0–3	Float	Ch. 2 Fixed Current Level (mA units); "0" to Exit Fixed Current
Response Data Bytes	0–3	Float	Ch. 2 Actual Current Level
	Code	Class	Description
Response Codes	0	Success	No Command-Specific Errors
	1–2		Undefined
	3	Error	Passed Parameter Too Large
	4	Error	Passed Parameter Too Small
	5–127		Undefined

Note: 1. Specify a value (in mA) to drive Ch. 2 to a particular output value. Specify "0" to exit the fixed current mode.

Command 163: Trim DAC Zero – Measured Current Chan #2 (in mA)			
	Byte	Format	Description
Request Data Bytes	0–3	Float	Ext. Measured Current Ch. #2 Level (mA units)
Response Data Bytes[1]	0–3	Float	Actual Measured Current Ch. #2 Level (mA units)
	Code	Class	Description
Response Codes	0	Success	No Command-Specific Errors
	1–2		Undefined
	3	Error	Passed Parameter Too Large
	4	Error	Passed Parameter Too Small
	5–8		Undefined
	9	Error	Incorrect Loop Current Mode or Value
	10–127		Undefined

Note: 1. The value returned in the response data bytes reflects the rounded or truncated value actually used by the device.

Command 164: Trim DAC Gain – Measured Current Chan #2 (in mA)			
	Byte	Format	Description
Request Data Bytes	0–3	Float	Ext. Measured Current Ch. #2 Level (mA units)
Response Data Bytes[1]	0–3	Float	Actual Measured Current Ch. #2 Level (mA units)
	Code	Class	Description
Response Codes	0	Success	No Command-Specific Errors
	1–2		Undefined
	3	Error	Passed Parameter Too Large
	4	Error	Passed Parameter Too Small
	5–8		Undefined
	9	Error	Incorrect Loop Current Mode or Value
	10–127		Undefined

Note: 1. The value returned in the response data bytes reflects the rounded or truncated value actually used by the device.

HART Command Bit Assignments

Command Status Bytes

The HART command response data field includes a status message in the first two bytes. The first byte (0) is the Comm Error/Response code. The second byte (1) is the Device status. Byte 0 indicates either a **communication error** (b7=1, remaining bits=error details) or a **response code** if no communication error exists (b7=0, remaining bits command response code integer value). Table 15 below summarizes the command status bytes. A status bit is cleared (0) for no error. A status bit is set (1) when an error (or condition) is detected.

Table 15 – Command Status Bytes, Bit Assignments

Byte	Bit	Error/Status Description	
		Communication Error	Response Code (No Comm Error)
Byte 0	0	**Reserved** – Bit cleared to zero.	Response Code (0-127)
	1	**Buffer Overflow** – The message was too long for the received buffer of the device.	
	2	**Reserved** – Bit cleared to zero.	
	3	**Longitudinal Parity Error** – The longitudinal parity calculated by the device did not match the check byte at the end of the message.	
	4	**Framing Error** – The stop bit of one or more bytes received by the device was not detected by the UART (i.e., a mark or 1 was not detected when a stop bit should have occurred).	
	5	**Overrun Error** – At least one byte of data in the receive buffer of the UART was overwritten before it was read (i.e. the slave did not process incoming byte fast enough).	
	6	**Vertical Parity Error** – The parity of one or more of the bytes received by the device was not odd	
	7	1: Set bit means byte represents communications error.	0: Cleared bit means byte represents response code.
Byte 1 *Device Status*	0	**Primary Variable Out of Limits** – The PV is beyond its operating limit.	
	1	**Non-Primary Variable Out of Limits** – A device variable not mapped to the PV is beyond its operating limits.	
	2	**Loop Current Saturated** – The loop current has reached its upper (or lower) endpoint limit and cannot increase (or decease) any further.	
	3	**Loop Current Fixed** – The loop current is being held at a fixed value and is not responding to process variations.	
	4	**More Status Available** – More status information is available via Command 48, Additional Device Status Bytes. See below.	
	5	**Cold Start** – A power failure or device reset has occurred.	
	6	**Configuration Changed** – An operation was performed that changed the device's configuration.	
	7	**Device Malfunction** – The device detected a serious error or failure that compromises device operation.	

Command 48, Additional Device Status Bytes

Table 16 below summarizes the Command 48 Additional Device Status bytes. This is a 6-byte field of which only the first 2 bytes (bytes 0 and 1) are used by the instrument. The remaining bytes (2–5) are unused/reserved. A status bit is cleared (0) for no error. A status bit is set (1) when an error (or condition) is detected.

Table 16 – Command 48, Additional Device Status Bytes Bit Assignments

Byte	Bit	Error/Status Description
Byte 0	0	Flow < Min Flow
	1	Flow > Min Flow
	2	Unused/Reserved
	3	Flow > Customer Max Flow
	4	Temperature < Customer Min Temperature
	5	Temperature > Customer Max Temperature
	6	Unused/Reserved
	7	tcDelta_r < dr_min
Byte 1	0	tcDelta_r > dr_max
	1	Unused/Reserved
	2	Unused/Reserved
	3	Unused/Reserved
	4	Unused/Reserved
	5	Unused/Reserved
	6	Unused/Reserved
	7	Delta_r > drNamur_max OR Delta_r < drNamur_min
Bytes 2–5		Unused/Reserved

HART Engineering Units Codes

Table 17 below summarizes the HART codes used to represent the instrument's engineering units.

Table 17 – HART Engineering Units Codes

Units Type	HART Code	Unit Description
Temperature	32	degrees Celsius
	33	degrees Fahrenheit
Volumetric Flow	123	Standard Cubic Feet per Minute (SCFM)
	185	Standard Cubic Feet per Hour (SCFH)
	182	Normal Cubic Meters per Minute (NCMM)
	121	Normal Cubic Meters per Hour (NCMH)
	175	Liter per Minute (LPH)
	16	Gallon per Minute (GPM)
	250	All Others
Mass Flow	82	Pounds per Hour (LB/H)
	75	Kilograms per Hour (KG/H)
	250	All Others
Velocity Flow	20	Standard Feet per Second (SFPS)
	21	Standard Meters per Second (SMPS)
	250	All Others
Totalizer	168	Standard Cubic Feet
	166	Normal Cubic Meters
	41	liters
	63	pounds
	61	kilograms
	40	gallons
	250	All Others
Plenum	49	millimeters
	47	inches
	250	All Others

4 MAINTENANCE

The FCI instrument requires little maintenance. There are no moving parts subject to wear in the instrument. The sensor assembly exposed to the process media is composed of 316 SS and Hastelloy C.

Without detailed knowledge of the application surroundings and process media, FCI cannot make specific recommendations for periodic inspection, cleaning or testing procedures. However, some general maintenance is offered below. Use operating experience to establish frequency of maintenance.

Calibration

Verify the calibration of the output and recalibrate every 18 months at a minimum.

Electrical Connections

Inspect cable connections on terminal strips and terminal blocks. Verify that terminal connections are tight and physically sound with no sign of corrosion.

Remote Enclosure

Verify that the moisture barriers and seals protecting the electronics in the local enclosure are adequate and that no moisture is entering the enclosure.

Electrical Wiring

Inspect the system's interconnecting cable, power wiring and flow element wiring on a common sense basis. Inspect the conductors for corrosion and the cable insulation for signs of deterioration.

Flow Element Connections

Verify the seals are performing properly and that there is no leakage of the process media. Check for deterioration of the gaskets and environmental seals.

Flow Element Assembly

Remove the flow element (insertion type, ST51A) or instrument/tee assembly (inline type, ST75A/ST75AV) for inspection based on historical evidence of debris, foreign matter, or scale build-up and/or plant shutdown schedules. Check for corrosion, stress cracking and build-up of oxides, salts or foreign substances. The thermowells must be physically intact and free of contaminants. Any debris or residue build-up could cause inaccurate flow indication. If necessary, clean the flow element with a soft brush and available solvents (compatible with stainless steel). Apply thread sealant to pipe threads before reinstalling the ST75A/ST75AV.

This Page Intentionally Left Blank

5 TROUBLESHOOTING

Application Verification

After verifying that the flow meter is functioning, review the application parameters below to verify the calibration matches the process media.

Equipment Needed

- Flow Instrument Calibration Data
- Process Parameters and Limits

Check Serial Numbers

Verify that the serial number of the flow element and the flow transmitter electronics are the same. The flow element and the flow transmitter are a matched set and cannot be operated independently.

Check the Instrument Installation

Verify correct mechanical and electrical installation. Check for secure wire/terminal connections (tighten as required). Verify the flow element is mounted at least 20 diameters downstream and 10 diameters upstream from any bends or interference in the process pipe or duct.

Check for Moisture

Check for moisture on the flow transmitter. Moisture may cause intermittent operation. Check for moisture on the flow element. If a component of the process media is near its saturation temperature it may condense on the flow element.

Check Application Design Requirements

1. Review the application design with plant operation personnel and plant engineers.
2. Ensure that plant equipment conforms to the actual conditions.
3. Verify operating temperature, operating pressure, line size and gas medium.

Verify Standard Versus Actual Process Conditions

The flow meter measures the mass flow rate. The mass flow rate is the mass of the gas flowing through a pipe per time. Other flow meters, such as an orifice plate or a pitot tube, measure the volumetric flow rate. The volumetric flow rate is the volume of gas per time. If the readings displayed do not agree with another instrument, some calculations may be necessary before comparing them. To calculate the mass flow rate, the volumetric flow rate and the pressure and temperature, the point of measurement must be known. Use the following equation to calculate the mass flow rate (Standard Volumetric Flow rate) for the other instrument:

Equation:

$$Q_S = Q_A \, x \frac{P_A}{T_A} x \frac{T_S}{P_S}$$

Where:

Q_A= Volumetric Flow Q_S= Standard Volumetric Flow

P_A= Actual Pressure T_A= Actual Temperature

P_S= Standard Pressure T_S= Standard Temperature

PSIA and °R are used for pressure and temperature units.

[Metric: Where bar(a) and °K are used for pressure and temperature.]

Example:

Q_A = 1212.7 ACFM Q_S = 1485 SCFM

P_A = 19.7 PSIA T_A = 120 °F (580 °R)

P_S = 14.7 PSIA T_S = 70 °F (530 °R)

[Metric: P_S = 1.01325 bar(a), T_S = 21.1 °C (294.1 °K)]

$$\left(\frac{1212.7 \; ACFM}{1}\right)\left(\frac{19.7 \; PSIA}{580 \; °R}\right)\left(\frac{530 \; °R}{14.7 \; PSIA}\right) = 1485 \text{ SCFM}$$

Verifying Calibration Parameters (Diagnostics)

The instrument uses a set of predetermined calibration parameters to process flow signals. Most of these parameters typically do not change. A *Delta R Data Sheet*, provided with the instrument, contains the factory-set parameters. To verify that these parameters have not changed, complete the following:

1. Identify the instrument's *Delta R Data Sheet* via its serial number.
2. To examine the stored parameters use the serial interface "D" menu. FC88: After entering the "D" menu press the [ENTER] key repeatedly as required to step through each parameter one line at a time. Table 18 below lists the parameters with space to record the instrument's actual values (print this page). Verify the instrument's parameters with the *Delta R Data Sheet*.

Table 18 – Diagnostic Test Sequence

Cust. Flow Data		Totalizer/Pulse Output		CB Setup (cont.)		CB Setup (cont.)	
S/W Version:		Tot Menu:		KFactor 4:		Temp Flag:	
Flow Factor:		Tot Flag:		ACT_Tslope 1:		Out Mode:	
Cmin Flow:		Totalizer:		ACT_Tslope 2:		Namur Mode:	
Cmax flow:		Rollover Cnt:		ACT_Tslope 3:		dR Namur Min:	
Eng Units:		Pulse Factor:		ACT_Tslope 4:		dR Namur Max:	
Line Size 0:		Pulse Out:		ACT_Tslope 5:		Boxcar Max:	
Line Size 1:		Hours:		ACT_Tslope 6:		HART Damping:	
Cmin Temp:		Sample Period:		ACT_Tslope 7:		RTD-SLP-385:	
Cmax Temp:		CB Setup		REF_Tslope 1:		Heater DAC:	
Cal Flow Data		ActR Slope:		REF_Tslope 2:		Htr Cur Adj:	
Min Flow:		ActR Offset:		REF_Tslope 3:		Ref Cur Adj:	
Max Flow:		ActR Ohm Adj.:		REF_Tslope 4:		% of Range:	
Density:		RefR Slope:		REF_Tslope 5:		User Name:	
*C1 [1]:		RefR Offset:		REF_Tslope 6:		Shop Order #:	
*C1 [2]:		RefR Ohm Adj.:		REF_Tslope 7:		Serial No.:	
*C1 [3]:		SpanIDAC 0:		ACT_Toffst 1:		Model#:	
*C1 [4]:		ZeroIDAC 0:		ACT_Toffst 2:			
*C1 [5]:		SpanIDAC 1:		ACT_Toffst 3:			
Break Pt:		ZeroIDAC 1:		ACT_Toffst 4:			
*C2 [1]:		TSpanIDAC 0:		ACT_Toffst 5:			
*C2 [2]:		TZero IDAC 0:		ACT_Toffst 6:			
*C2 [3]:		TSpanIDAC 1:		ACT_Toffst 7:			
*C2 [4]:		TZeroIDAC 1:		REF_Toffst 1:			
*C2 [5]:		State 0:		REF_Toffst 2:			
dR Min:		Switch Pt 0:		REF_Toffst 3:			
dR Max:		State 1:		REF_Toffst 4:			
Cal Ref:		Switch Pt 1:		REF_Toffst 5:			
Tcslp:		KFactor 1:		REF_Toffst 6:			
Tcslp 0:		KFactor 2:		REF_Toffst 7:			
Tcslp 2:		KFactor 3:		I Factor Lim:			

An issue may exist if change is noted for any coefficient set parameter marked with an asterisk (*). Contact Customer Service if this is the case. If the parameters have not changed, continue with the next section.

Hardware Verification

Equipment Required:

- Digital Multimeter (DMM)

Fuse Check

Verify that fuse F1, located on the interface board, is in normal working condition. Refer to Power Fuse Replacement, page 17 for details on fuse access/location. Check the fuse for continuity. If fuse reads open, replace it with Littelfuse 454 Series fuse, part no. 045401.5.

Sensor Check

Verify sensor element continuity and resistance (integral unit only).

1. Remove power from the instrument.
2. Remove enclosure housing blind lid, exposing interface board and its power and signal connections. See Accessing the Interface Board Connection Terminals, page 16.
3. Remove sensor plug from interface board J4 (squeeze plug's latch at top of connector, and then pull up).
4. Using an ohmmeter measure resistance between socket pins 1 & 3 (active) and socket pins 5 & 7 (reference). Both readings should be within 1100 Ω ±20 Ω. The resistance is temperature dependent. The resistance at 70 °F is approximately 1082 Ω. Refer to Figure 25 below.

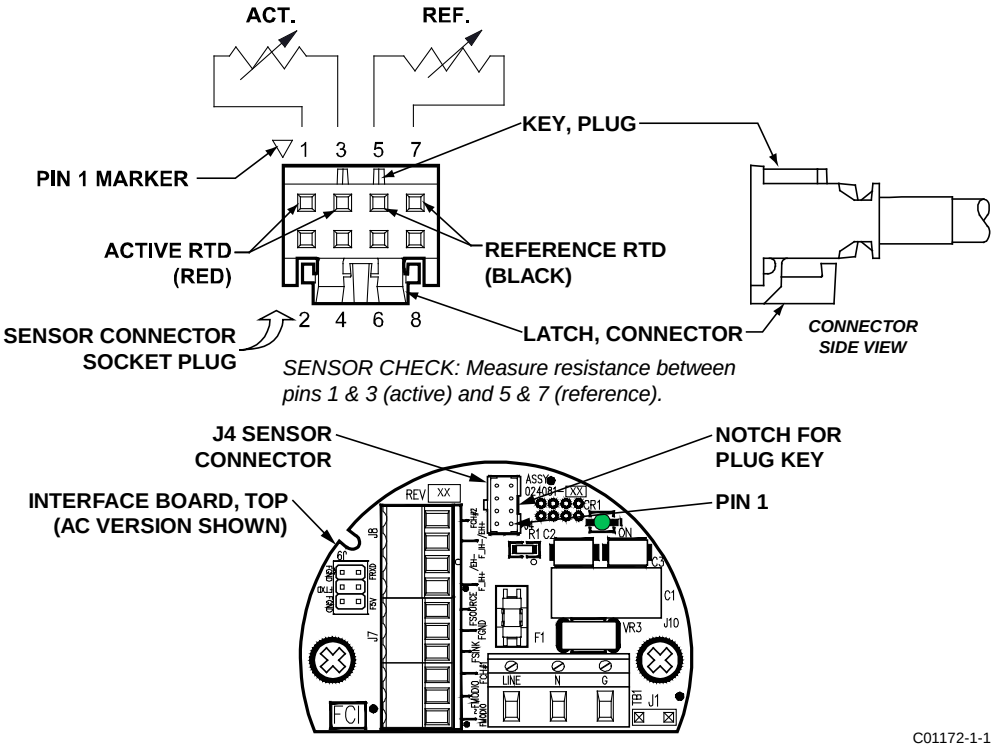

Figure 25 – Reference and Active Sensor Resistance Check (AC Version Shown)

FCI provides full in-house technical support. Additional technical representation is also provided by FCI field representatives. Before contacting a field or in-house representative, please perform the troubleshooting techniques outlined in this manual. If problems persist, contact the FCI Customer Service department at 1-800-854-1993 or 1-760-744-6950.

If the instrument is to be returned to FCI, please obtain a Return Authorization. This form contains a declaration of decontamination clearing information with which the instrument must comply before shipment to FCI.

Transmitter Circuit Calibration Check (Delta R Verification)

References

- Delta R Data Sheet

Equipment

- Serial console connection to instrument via FC88 or PC (see Instrument Configuration and Setup Using the Service Port (RS-232), page 23)
- DMM
- Delta R data sheet (matched to serial number of instrument under test)
- Two precision decade resistance boxes, 0.1% (largest steps: 1 KΩ, smallest steps: 0.01 Ω)
- 250 Ω axial lead precision resistor, 0.1% or better, 1 W
- Small flat-blade screwdriver, 3/32" width blade
- Banana plug jumper cable
- FCI Normalization Cable (FCI part number 022610-0x, unit part number 022517)

Procedure

1. Verify all “D” mode calibration parameters are correct according to the meter’s Delta R Data Sheet before starting. See Verifying Calibration Parameters , page 58.
2. Turn instrument power OFF.
3. Remove enclosure housing blind lid, exposing interface board and its power and signal connections. See Accessing the Interface Board Connection Terminals, page 16.
4. Install 250 Ω precision resistor across instrument’s Ch.1 4-20 mA output (INT_HART- & INT_HART+/J8-4 & J8-1).
5. Connect normalization cable plug to interface board J4. Connect other end of normalization cable (with 2 pair of dual banana plugs) to resistance decade boxes as shown in Figure 26 below.

   Note: Interconnector wiring (resistance decade box to electronics) must be 24 AWG and less than 36 inches long to avoid any inaccuracies caused by improper wire lengths or wire gauges.

6. Connect both resistance decade box LOW terminals together with banana plug jumper cable (stack onto dual plug).
7. Set both decade boxes for nominal resistance value (1000 Ω) ±0.01%.
8. Connect DMM, set for volts DC, across 250 Ω resistor and monitor voltage output.
9. Turn power ON and allow 5 minutes for stabilization.
10. At serial console main menu enter “1” to place instrument in “RS-232” mode (which puts instrument in “Normal Mode Operation”). (See Main Menu, page 24.)
11. Adjust *Active* decade box (*Reference* decade box remains fixed @ 1000 ohms) to achieve the appropriate Delta R for displayed flow value and output, noted on meter’s Delta R Data Sheet.
12. Enter “C” at console. Verify meter’s displayed TCDR and REFR values correspond to displayed flow rate per meter’s Delta R Data Sheet.
13. Return to Normal Mode Operation (“T” menu).

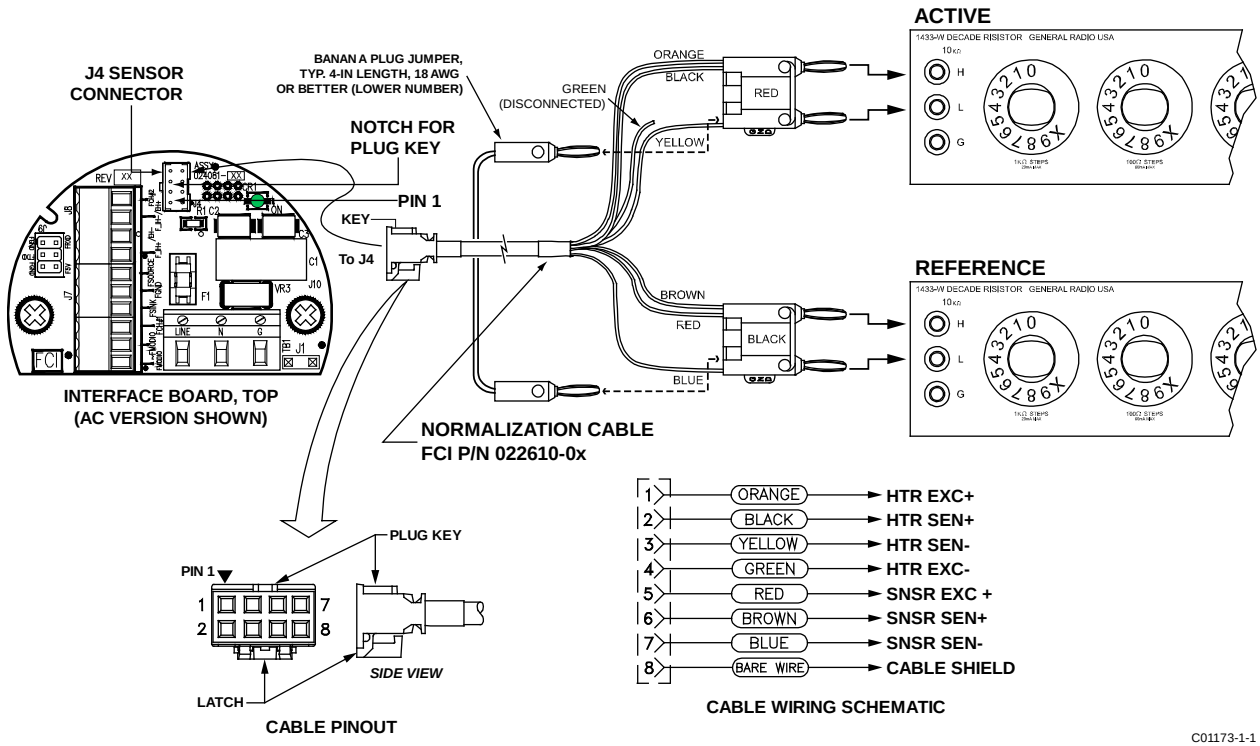

Figure 26 – Transmitter Circuit Calibration Diagram

This Page Intentionally Left Blank

APPENDIX A DRAWINGS

This appendix contains ST51A/ST75A/ST75AV technical drawings, which are summarized in Table 19 below.

Table 19 – Appendix A, List of Drawings

Dwg. No.	Dwg. Type	Page No.	Description
C01210-1-1	Exploded Assy.	64	Basic Instrument Assembly: ST51A, ST75A and ST75AV
021263C	Configuration	65	ST50/ST51 Assembly Orientation
004802A	Outline	66	Flow Transmitter, ST51, Local Hazardous Location Type 4X Enclosure
004805A	Outline	67	Flow Transmitter, ST51, Hazardous Locations, Local and Remote Type 4X Enclosures
020943B	Configuration	68	ST75/ST75V Assembly Orientation
004655A	Outline	69	Flow Transmitter, ST75, Compression Fitting Tee, Local Type 4X Enclosure
004653A	Outline	70	Flow Transmitter, ST75, Female NPT Tee, Local Type 4X Enclosure
004737A	Outline	71	Flow Transmitter, ST75V, Integral, Male NPT
004738A	Outline	72	Flow Transmitter, ST75V, Integral, Female NPT
004739A	Outline	73	Flow Transmitter, ST75V, Integral, Flanged
004740A	Outline	74	Flow Transmitter, ST75V, Remote, Male NPT
004751A	Outline	75	Flow Transmitter, ST75V, Remote, Female NPT
004752A	Outline	76	Flow Transmitter, ST75V, Remote, Flanged
025611A	Wiring Diagram	77	Wiring Diagram, Third Generation, ST51A/ST75A/ST75AV

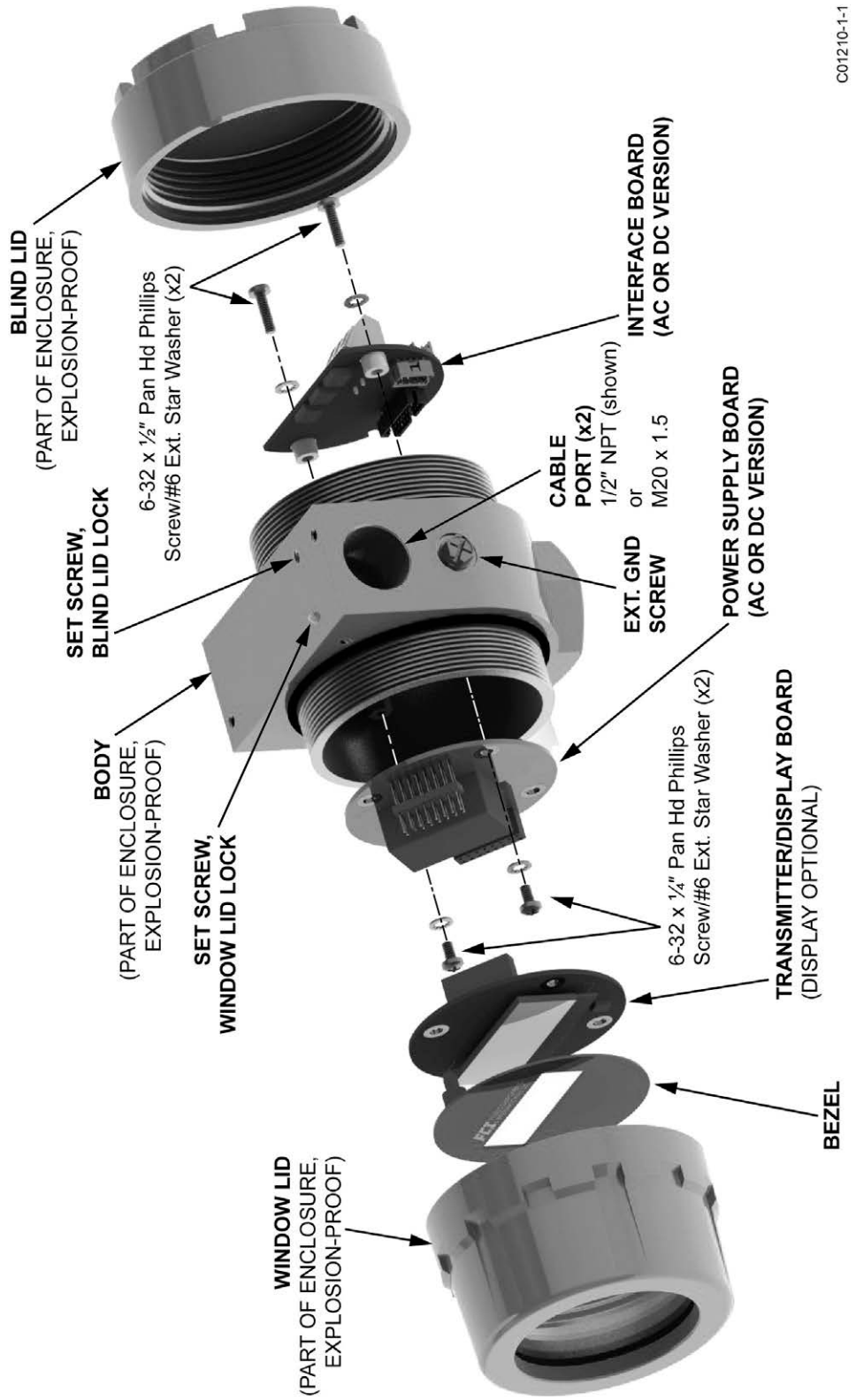

Figure 27 – Basic Instrument Assembly: ST51A, ST75A and ST75AV

NOTICE OF PROPRIETARY RIGHTS

This document contains confidential technical data, including trade secrets and proprietary information, which is property of Fluid Components International LLC (FCI). Disclosure of this data to you is expressly conditional upon your assent that its use is limited to use within your company only (and does not include manufacture or processing uses). Any other use is strictly prohibited without prior written consent of FCI.

REVISION		
REV	DESCRIPTION	DATE
C	ECN002415	6/23/2015

INTEGRAL HORIZONTAL MOUNTINGS

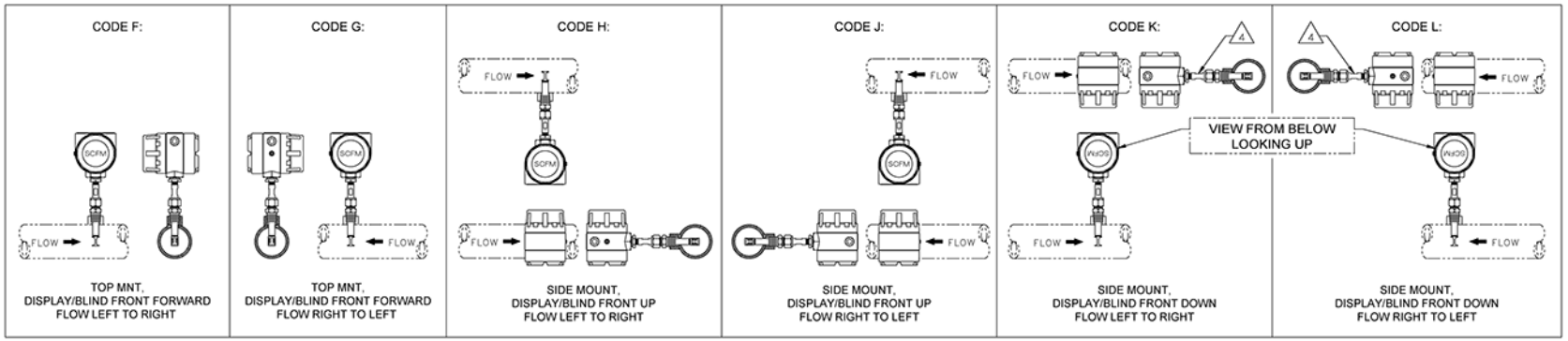

INTEGRAL VERTICAL MOUNTINGS

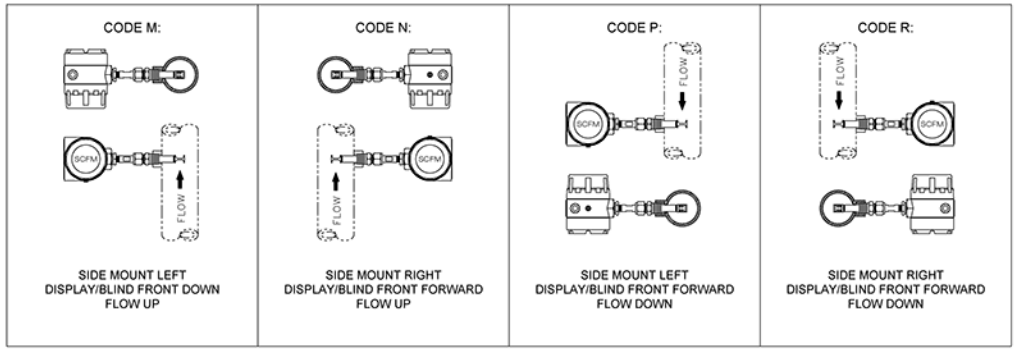

4 FLOW ARROW ON TOP AS SHOWN.

3. THE LCD DISPLAY CAN BE USER ROTATED AND VIEWED AT ANY 90 DEGREE ORIENTATION.
2. IN REMOTE ELECTRONIC CONFIGURATIONS, THE LOCAL ENCLOSURE WILL BE ORIENTED AS SHOWN WITH SOLID COVER ON BOTH SIDES. INTERCONNECTING TERMINALS LOCATED INSIDE.
1. THIS DRAWING IS GENERIC IN NATURE, FOR SPECIFIC MODEL TYPE, ORIENTATION, CUSTOMER PROCESS CONNECTION, ETC, REFER TO IO&M MANUAL.

NOTES: UNLESS OTHERWISE SPECIFIED

NEXT ASSY	USED ON
APPLICATION	
THIRD ANGLE PROJECTION	

UNLESS OTHERWISE SPECIFIED DIMENSIONS ARE IN INCHES
TOLERANCES
DECIMALS ANGULAR
X ±.1 ±1/2°
XX ±.03
XXX ±.010
MATERIAL
MACH. SURFACE FINISH: 125 RMS MAX
MACH. BEAD .030
DO NOT SCALE DRAWING
PARTS TO BE FREE OF BURRS & SHARP EDGES

APPROVALS		APPROVALS	
PRODUCT CERT APVL	N/A	DRAWN	6/23/2015 Ed Pasqual
CONTRACT	N/A	CHECK	6/23/2015 Sam Kresch
MFG ENGR	N/A	ENGR	6/23/2015 Ed Pasqual
MATL MGMT	6/23/2015 Nancy Peters	ENGR	N/A
MFG	N/A	AGNCY QUAL	N/A
QA	6/23/2015 Burt Tanaka	NUC QUAL	N/A

FCI® FLUID COMPONENTS INTERNATIONAL LLC
SAN MARCOS, CA 92078

TITLE: ST50/ST51, ASSEMBLY ORIENTATION

SIZE	CAGE CODE	DWG NO.	REV
D	64818	021263	C
		SCALE NONE	SHEET 1 OF 1

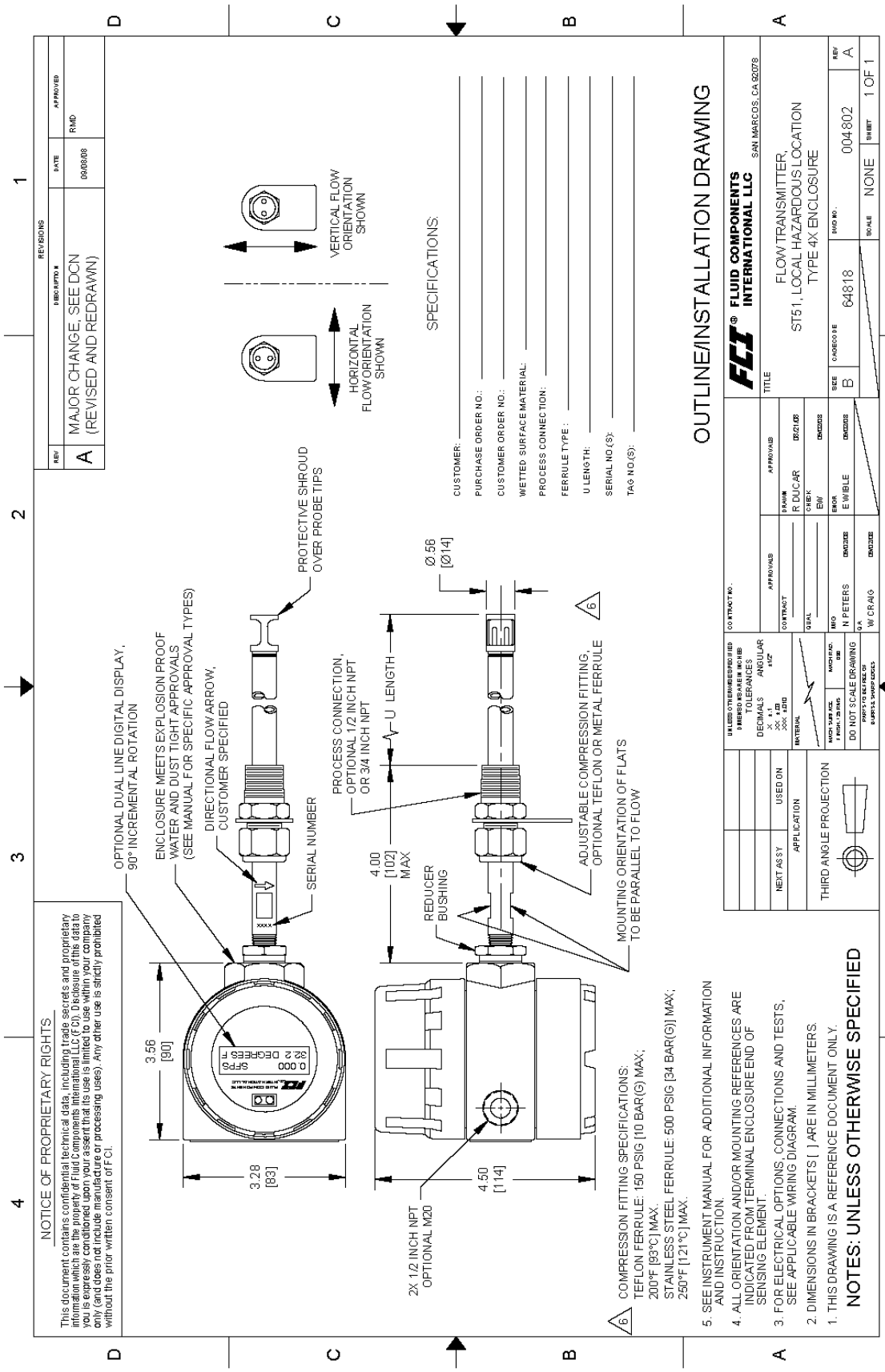
OUTLINE/INSTALLATION DRAWING
FLUID COMPONENTS INTERNATIONAL LLC
SAN MARCOS, CA 92078
FLOW TRANSMITTER, ST51, LOCAL HAZARDOUS LOCATION TYPE 4X ENCLOSURE
64818
004802
SCALE NONE
SHEET 1 OF 1
REVISIONS
A MAJOR CHANGE, SEE DCN (REVISED AND REDRAWN) 09/05/08 RMD
NOTICE OF PROPRIETARY RIGHTS
This document contains confidential technical data, including trade secrets and proprietary information which are the property of Fluid Components International LLC (FCI). Disclosure of this data to you is expressly conditioned upon your assent that its use is limited to use within your company only (and does not include manufacture or processing uses). Any other use is strictly prohibited without the prior written consent of FCI.
OPTIONAL DUAL LINE DIGITAL DISPLAY, 90° INCREMENTAL ROTATION
ENCLOSURE MEETS EXPLOSION PROOF WATER AND DUST TIGHT APPROVALS (SEE MANUAL FOR SPECIFIC APPROVAL TYPES)
DIRECTIONAL FLOW ARROW, CUSTOMER SPECIFIED
SERIAL NUMBER
PROTECTIVE SHROUD OVER PROBE TIPS
PROCESS CONNECTION, OPTIONAL 1/2 INCH NPT OR 3/4 INCH NPT
U LENGTH
REDUCER BUSHING
ADJUSTABLE COMPRESSION FITTING, OPTIONAL TEFLON OR METAL FERRULE
MOUNTING ORIENTATION OF FLATS TO BE PARALLEL TO FLOW
2X 1/2 INCH NPT OPTIONAL M20
3.56 [90]
3.28 [83]
4.00 [102] MAX
4.50 [114]
Ø.56 [Ø14]
HORIZONTAL FLOW ORIENTATION SHOWN
VERTICAL FLOW ORIENTATION SHOWN
SPECIFICATIONS:
CUSTOMER:
PURCHASE ORDER NO.:
CUSTOMER ORDER NO.:
WETTED SURFACE MATERIAL:
PROCESS CONNECTION:
FERRULE TYPE:
U LENGTH:
SERIAL NO.(S):
TAG NO.(S):
NOTES: UNLESS OTHERWISE SPECIFIED
1. THIS DRAWING IS A REFERENCE DOCUMENT ONLY.
2. DIMENSIONS IN BRACKETS [ ] ARE IN MILLIMETERS.
3. FOR ELECTRICAL OPTIONS, CONNECTIONS AND TESTS, SEE APPLICABLE WIRING DIAGRAM.
4. ALL ORIENTATION AND/OR MOUNTING REFERENCES ARE INDICATED FROM TERMINAL ENCLOSURE END OF SENSING ELEMENT.
5. SEE INSTRUMENT MANUAL FOR ADDITIONAL INFORMATION AND INSTRUCTION.
6. COMPRESSION FITTING SPECIFICATIONS: TEFLON FERRULE: 150 PSIG [10 BAR(G) MAX; 200°F [93°C] MAX. STAINLESS STEEL FERRULE: 500 PSIG [34 BAR(G)] MAX; 250°F [121°C] MAX.
THIRD ANGLE PROJECTION
DO NOT SCALE DRAWING

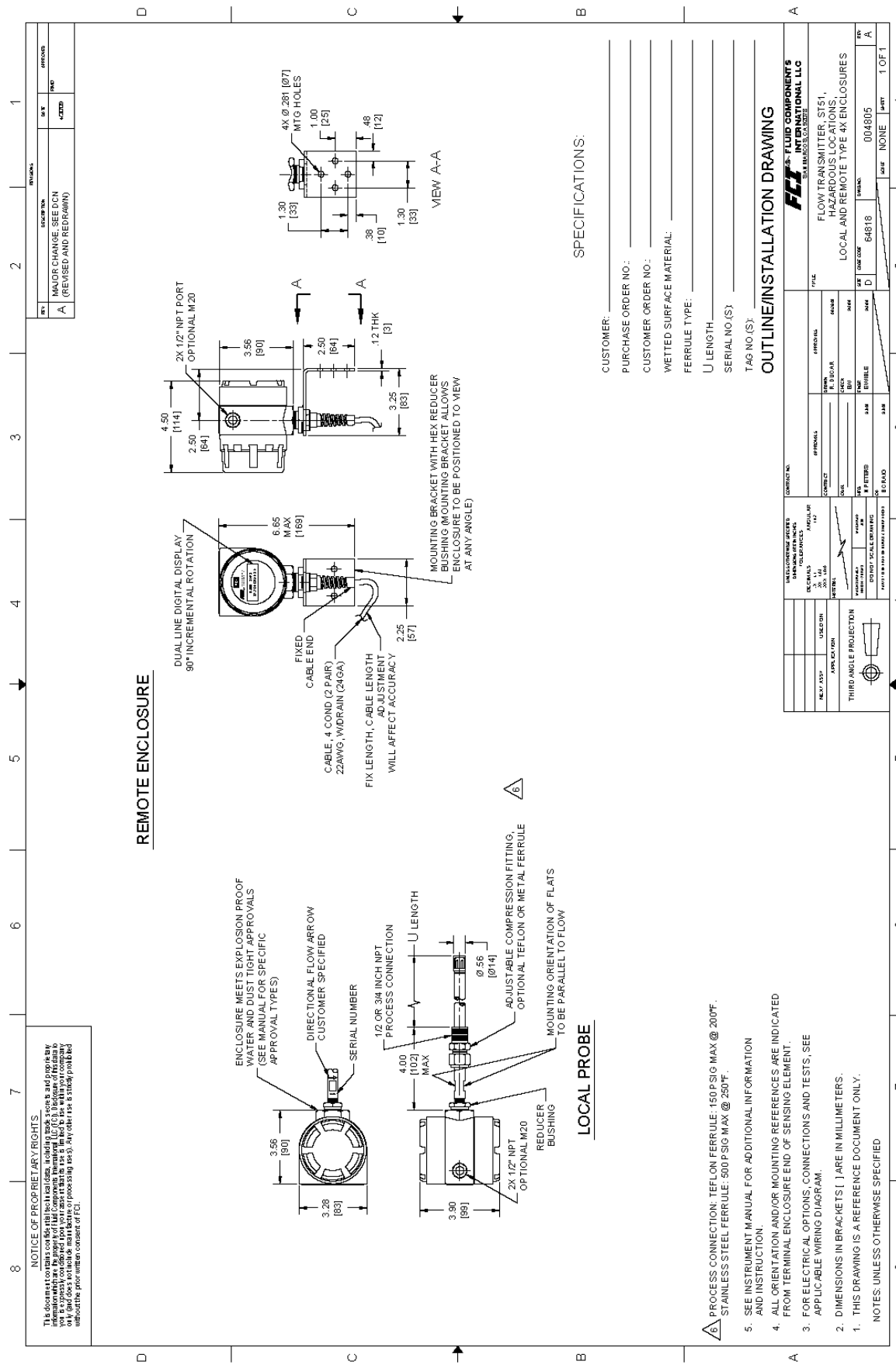
REMOTE ENCLOSURE
DUAL LINE DIGITAL DISPLAY 90° INCREMENTAL ROTATION
6.85 MAX [169]
FIXED CABLE END
CABLE, 4 COND (2 PAIR) 22AWG, W/DRAIN (24GA)
FIX LENGTH, CABLE LENGTH ADJUSTMENT WILL AFFECT ACCURACY
2.25 [57]
MOUNTING BRACKET WITH HEX REDUCER BUSHING (MOUNTING BRACKET ALLOWS ENCLOSURE TO BE POSITIONED TO VIEW AT ANY ANGLE)
2X 1/2" NPT PORT OPTIONAL M20
4.50 [114]
2.50 [64]
3.56 [90]
2.50 [64]
.12 THK [3]
3.25 [83]
VIEW A-A
4X Ø.281 [Ø7] MTG HOLES
1.30 [33]
1.00 [25]
.38 [10]
.48 [12]
1.30 [33]
LOCAL PROBE
ENCLOSURE MEETS EXPLOSION PROOF WATER AND DUST TIGHT APPROVALS (SEE MANUAL FOR SPECIFIC APPROVAL TYPES)
DIRECTIONAL FLOW ARROW CUSTOMER SPECIFIED
SERIAL NUMBER
1/2 OR 3/4 INCH NPT PROCESS CONNECTION
U LENGTH
4.00 [102] MAX
Ø.56 [Ø14]
ADJUSTABLE COMPRESSION FITTING; OPTIONAL TEFLON OR METAL FERRULE
MOUNTING ORIENTATION OF FLATS TO BE PARALLEL TO FLOW
3.56 [90]
3.28 [83]
3.90 [99]
2X 1/2" NPT OPTIONAL M20
REDUCER BUSHING
SPECIFICATIONS:
CUSTOMER:
PURCHASE ORDER NO.:
CUSTOMER ORDER NO.:
WETTED SURFACE MATERIAL:
FERRULE TYPE:
U LENGTH
SERIAL NO.(S):
TAG NO.(S):
OUTLINE/INSTALLATION DRAWING
FLUID COMPONENTS INTERNATIONAL LLC
FLOW TRANSMITTER, ST51, HAZARDOUS LOCATIONS, LOCAL AND REMOTE TYPE 4X ENCLOSURES
64618
004905
NONE
1 OF 1
NOTICE OF PROPRIETARY RIGHTS
PROCESS CONNECTION: TEFLON FERRULE: 150 PSIG MAX @ 200°F. STAINLESS STEEL FERRULE: 500 PSIG MAX @ 250°F.
FOR ELECTRICAL OPTIONS, CONNECTIONS AND TESTS, SEE APPLICABLE WIRING DIAGRAM.
SEE INSTRUMENT MANUAL FOR ADDITIONAL INFORMATION AND INSTRUCTION.
ALL ORIENTATION AND/OR MOUNTING REFERENCES ARE INDICATED FROM TERMINAL ENCLOSURE END OF SENSING ELEMENT.
DIMENSIONS IN BRACKETS [ ] ARE IN MILLIMETERS.
THIS DRAWING IS A REFERENCE DOCUMENT ONLY.
NOTES: UNLESS OTHERWISE SPECIFIED

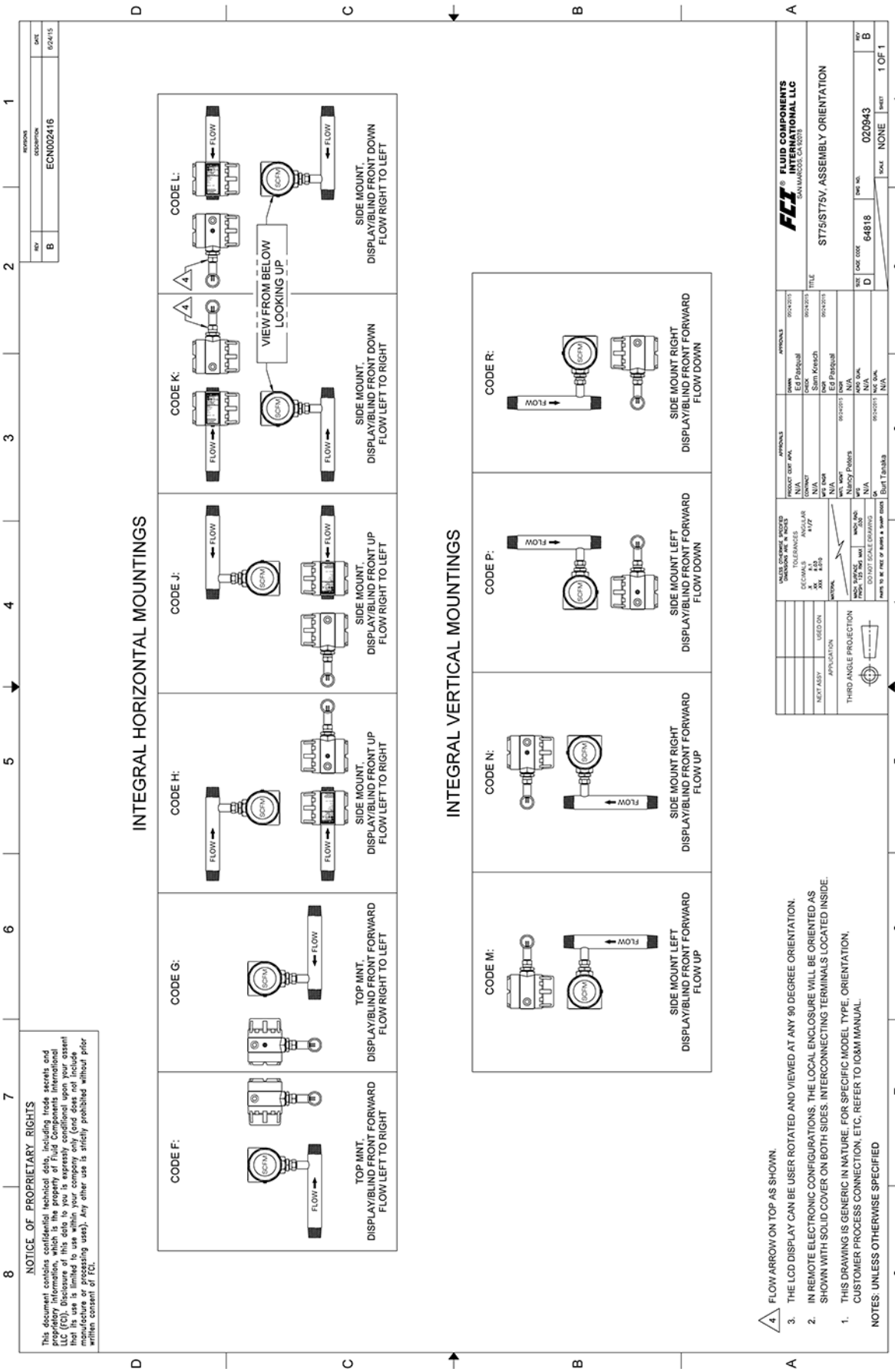
INTEGRAL HORIZONTAL MOUNTINGS
CODE F:
TOP MNT,
DISPLAY/BLIND FRONT FORWARD
FLOW LEFT TO RIGHT
CODE G:
TOP MNT,
DISPLAY/BLIND FRONT FORWARD
FLOW RIGHT TO LEFT
CODE H:
SIDE MOUNT,
DISPLAY/BLIND FRONT UP
FLOW LEFT TO RIGHT
CODE J:
SIDE MOUNT,
DISPLAY/BLIND FRONT UP
FLOW RIGHT TO LEFT
CODE K:
VIEW FROM BELOW
LOOKING UP
SIDE MOUNT,
DISPLAY/BLIND FRONT DOWN
FLOW LEFT TO RIGHT
CODE L:
SIDE MOUNT,
DISPLAY/BLIND FRONT DOWN
FLOW RIGHT TO LEFT
INTEGRAL VERTICAL MOUNTINGS
CODE M:
SIDE MOUNT LEFT
DISPLAY/BLIND FRONT FORWARD
FLOW UP
CODE N:
SIDE MOUNT RIGHT
DISPLAY/BLIND FRONT FORWARD
FLOW UP
CODE P:
SIDE MOUNT LEFT
DISPLAY/BLIND FRONT FORWARD
FLOW DOWN
CODE R:
SIDE MOUNT RIGHT
DISPLAY/BLIND FRONT FORWARD
FLOW DOWN
NOTICE OF PROPRIETARY RIGHTS
This document contains confidential technical data, including trade secrets and proprietary information, which is the property of Fluid Components International LLC (FCI). Disclosure of this data to you is expressly conditioned upon your consent that its use is limited to use within your company only (and does not include manufacture or processing uses). Any other use is strictly prohibited without prior written consent of FCI.
REVISIONS
REV
DESCRIPTION
DATE
B
ECN002416
6/24/15
FLUID COMPONENTS INTERNATIONAL LLC
SAN MARCOS, CA 92078
ST75/ST75V, ASSEMBLY ORIENTATION
SIZE D
CAGE CODE 64818
DWG NO. 020943
REV B
SCALE NONE
SHEET 1 OF 1
THIRD ANGLE PROJECTION
1. THIS DRAWING IS GENERIC IN NATURE. FOR SPECIFIC MODEL TYPE, ORIENTATION, CUSTOMER PROCESS CONNECTION, ETC, REFER TO IO&M MANUAL.
2. IN REMOTE ELECTRONIC CONFIGURATIONS, THE LOCAL ENCLOSURE WILL BE ORIENTED AS SHOWN WITH SOLID COVER ON BOTH SIDES. INTERCONNECTING TERMINALS LOCATED INSIDE.
3. THE LCD DISPLAY CAN BE USER ROTATED AND VIEWED AT ANY 90 DEGREE ORIENTATION.
4 FLOW ARROW ON TOP AS SHOWN.
NOTES: UNLESS OTHERWISE SPECIFIED

NOTICE OF PROPRIETARY RIGHTS

This document contains confidential technical data, including trade secrets and proprietary information which are the property of Fluid Components Intl (FCI). Disclosure of this data to you is expressly conditioned upon your assent that its use is limited to use within your company only (and does not include manufacture or processing uses). Any other use is strictly prohibited without the prior written consent of FCI.

REVISIONS			
REV	DESCRIPTION	DATE	APPROVED
A	MAJOR (SEE DCN)	9/9/08	LGF

CONFIG	DIM A TUBE SIZE	DIM B TOP TO FLOW CL	DIM C FLOW CL TO BOTTOM	DIM D TEE LENGTH
ST75-XXXGXX	1/4 INCH TUBING	5.7 MAX [144.8]	.33 [8.39]	2.34 [59.44]
ST75-XXXHXX	1/2 INCH TUBING	5.9 MAX [149.9]	.53 [13.46]	2.84 [72.14]
ST75-XXXJXX	1 INCH TUBING	7.8 MAX [198.1]	.87 [22.10]	3.86 [98.04]

TUBE TEE CONFIGURATION

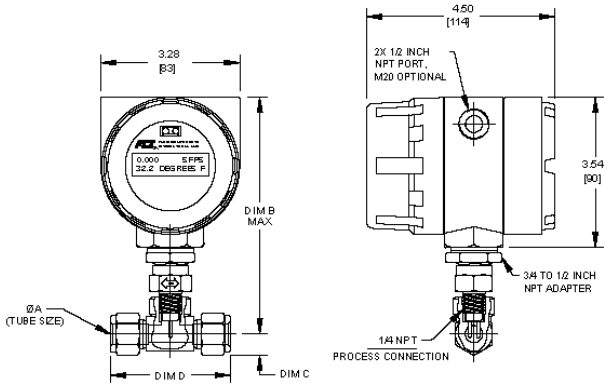

SPECIFICATIONS:

CUSTOMER: _____

PURCHASE ORDER NO.: _____

CUSTOMER ORDER NO.: _____

WETTED SURFACE MATERIAL: _____

FERRULE TYPE : _____

U LENGTH: _____

SERIAL NO.(S): _____

TAG NO.(S): _____

6. PROCESS PRESSURE: 600 PSIG MAX.
5. SEE INSTRUMENT MANUAL FOR ADDITIONAL INFORMATION AND INSTRUCTION.
4. ALL ORIENTATION AND/OR MOUNTING REFERENCES ARE INDICATED FROM TERMINAL ENCLOSURE END OF SENSING ELEMENT.
3. FOR ELECTRICAL OPTIONS, CONNECTIONS AND TESTS, SEE APPLICABLE WIRING DIAGRAM.
2. DIMENSIONS IN BRACKETS [ ] ARE IN MILLIMETERS.
1. THIS DRAWING IS A REFERENCE DOCUMENT ONLY.

NOTES: UNLESS OTHERWISE SPECIFIED

OUTLINE/INSTALLATION DRAWING

NEXT ASSY	USED ON
APPLICATION	

THIRD ANGLE PROJECTION

UNLESS OTHERWISE SPECIFIED DIMENSIONS ARE IN INCHES
TOLERANCES
DECIMALS ANGULAR
.X ±.1 ±1/2°
.XX ±.03
.XXX ±.010

MATERIAL

MACH SURFACE FINISH: 125 RMS | MACH RAD: .030

DO NOT SCALE DRAWING

PARTS TO BE FREE OF BURRS & SHARP EDGES

CONTRACT NO.

APPROVALS		APPROVALS	
CONTRACT		DRAWN	T ELLERBY 12/10/04
QUAL		CHECK	F STUMPGES 2/1/05
MFG	N PETERS 3/15/05	ENGR	E WIBLE 2/22/05
QA	R OGLE 5/3/05		

FCI® FLUID COMPONENTS INTL
a limited liability company
SAN MARCOS, CA 92069

TITLE: FLOW TRANSMITTER, ST75, COMPRESSION FITTING TEE, LOCAL TYPE 4X ENCLOSURE

SIZE	CAGE CODE	DWG NO.	REV
B	64818	004655	A

SCALE NONE SHEET 1 OF 1

NOTICE OF PROPRIETARY RIGHTS

This document contains confidential technical data, including trade secrets and proprietary information which are the property of Fluid Components Intl (FCI). Disclosure of this data to you is expressly conditioned upon your assent that its use is limited to use within your company only (and does not include manufacture or processing uses). Any other use is strictly prohibited without the prior written consent of FCI.

REVISIONS			
REV	DESCRIPTION	DATE	APPROVED
A	MAJOR (SEE DCN)	9/9/08	LGF

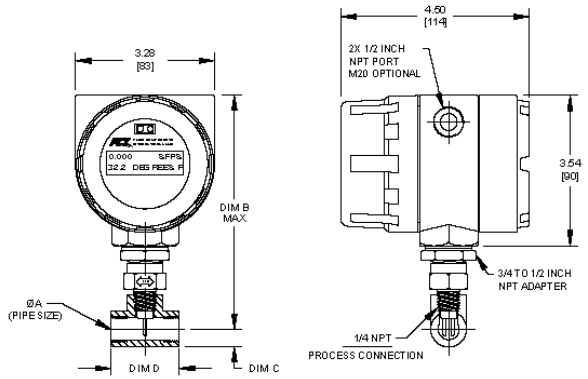

CONFIG	DIM A PIPE SIZE	DIM B TOP TO FLOW CL	DIM C FLOW CL TO BOTTOM	DIM D TEE LENGTH
ST75-XXXAXX	1/4 INCH PIPE	6.0 MAX [152.4]	.38 [9.65]	1.54 [39.12]
ST75-XXXBXX	1/2 INCH PIPE	6.5 MAX [165.1]	.56 [14.22]	2.28 [57.91]
ST75-XXXCXX	3/4 INCH PIPE	7.0 MAX [177.8]	.68 [17.27]	2.56 [65.02]
ST75-XXXDXX	1 INCH PIPE	7.3 MAX [185.4]	.86 [21.84]	2.92 [74.17]
ST75-XXXEXX	1 1/2 INCH PIPE	7.8 MAX [198.1]	1.17 [29.72]	3.82 [97.03]
ST75-XXXFXX	2 INCH PIPE	8.0 MAX [203.2]	1.42 [36.07]	4.66 [118.40]

SPECIFICATIONS:

CUSTOMER: _____

PURCHASE ORDER NO.: _____

CUSTOMER ORDER NO.: _____

WETTED SURFACE MATERIAL: _____

U LENGTH: _____

SERIAL NO.(S): _____

TAG NO.(S): _____

6. PROCESS PRESSURE: 240 PSIG MAX.
5. SEE INSTRUMENT MANUAL FOR ADDITIONAL INFORMATION AND INSTRUCTION.
4. ALL ORIENTATION AND/OR MOUNTING REFERENCES ARE INDICATED FROM TERMINAL ENCLOSURE END OF SENSING ELEMENT.
3. FOR ELECTRICAL OPTIONS, CONNECTIONS AND TESTS, SEE APPLICABLE WIRING DIAGRAM.
2. DIMENSIONS IN BRACKETS [ ] ARE IN MILLIMETERS.
1. THIS DRAWING IS A REFERENCE DOCUMENT ONLY.

NOTES: UNLESS OTHERWISE SPECIFIED

OUTLINE/INSTALLATION DRAWING

NEXT ASSY	USED ON
APPLICATION	

THIRD ANGLE PROJECTION

UNLESS OTHERWISE SPECIFIED DIMENSIONS ARE IN INCHES
TOLERANCES
DECIMALS ANGULAR
.X ±.1 ±1/2°
.XX ±.03
.XXX ±.010

MATERIAL

MACH SURFACE FINISH: 125 RMS | MACH RAD: .030

DO NOT SCALE DRAWING

PARTS TO BE FREE OF BURRS & SHARP EDGES

CONTRACT NO.

APPROVALS		APPROVALS	
CONTRACT		DRAWN	T ELLERBY 12/10/04
QUAL		CHECK	F STUMPGES 2/1/05
MFG	N PETERS 5/3/05	ENGR	E WIBLE 2/22/05
QA	R OGLE 5/3/05		

FCI® FLUID COMPONENTS INTL
a limited liability company
SAN MARCOS, CA 92069

TITLE: FLOW TRANSMITTER, ST75, FEMALE NPT TEE, LOCAL TYPE 4X ENCLOSURE

SIZE	CAGE CODE	DWG NO.	REV
B	64818	004653	A

SCALE NONE SHEET 1 OF 1

NOTICE OF PROPRIETARY RIGHTS

This document contains confidential technical data, including trade secrets and proprietary information which are the property of Fluid Components International LLC (FCI). Disclosure of this data to you is expressly conditioned upon your assent that its use is limited to use within your company only (and does not include manufacture or processing uses). Any other use is strictly prohibited without the prior written consent of FCI.

REVISIONS			
REV	DESCRIPTION	DATE	APPROVED
A	MAJOR (SEE DCN)	9/9/08	LGF

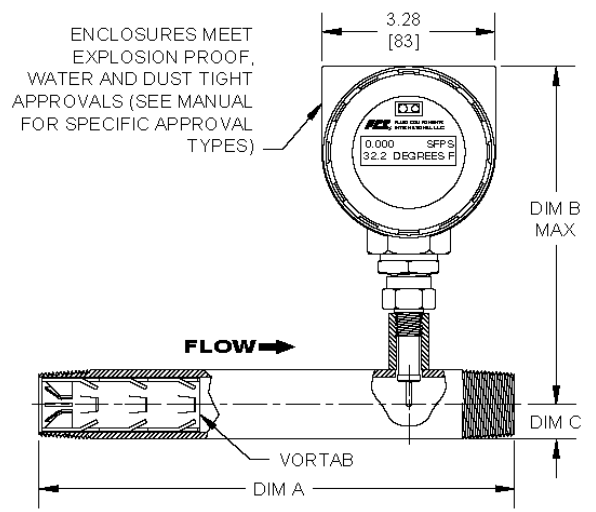

FLOW ELEMENT ASSEMBLY

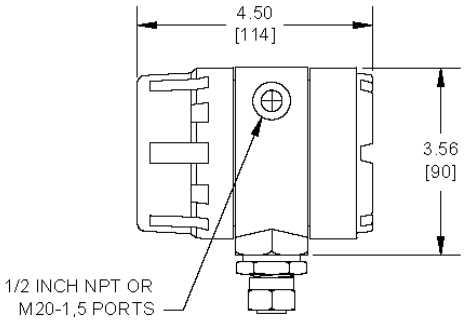

LINE SIZE	DIM A	DIM B	DIM C
1/4 INCH	5.00 [127]	5.50 [140]	.38 [9,5]
1/2 INCH	7.50 [190,5]	5.69 [144,5]	.42 [10,6]
3/4 INCH	9.00 [229]	6.45 [164]	.51 [13]
1 INCH	9.00 [229]	6.44 [163,5]	.65 [16,5]
1-1/2 INCH	13.50 [343]	6.42 [163]	.95 [24]
2 INCH	18.00 [457]	6.43 [163]	1.19 [30]

SPECIFICATIONS

CUSTOMER: _____

PURCHASE ORDER NO: _____

CUSTOMER ORDER NO: _____

LINE SIZE: _____

SERIAL NO(S): _____

TAG NO(S): _____

4. SEE INSTRUMENT MANUAL FOR ADDITIONAL INFORMATION AND INSTRUCTION.
3. FOR ELECTRICAL OPTIONS, CONNECTIONS AND TESTS, SEE APPLICABLE WIRING DIAGRAM.
2. DIMENSIONS IN BRACKETS [ ] ARE IN MILLIMETERS.
1. THIS DRAWING IS A REFERENCE DOCUMENT ONLY.

NOTES: UNLESS OTHERWISE SPECIFIED

OUTLINE/INSTALLATION DRAWING

NEXT ASSY | USED ON

APPLICATION

THIRD ANGLE PROJECTION

UNLESS OTHERWISE SPECIFIED DIMENSIONS ARE IN INCHES
TOLERANCES
DECIMALS ANGULAR ±1/2°
.X ±.1
.XX ±.03
.XXX ±.010

MATERIAL

MACH SURFACE FINISH, 125 RMS | MACH RAD. .030

DO NOT SCALE DRAWING

PARTS TO BE FREE OF BURRS & SHARP EDGES

CONTRACT NO.

APPROVALS	APPROVALS
CONTRACT	DRAWN L FUSTING 10/17/07
QUAL	CHECK
MFG	ENGR
QA	

FLUID COMPONENTS INTERNATIONAL LLC
SAN MARCOS, CA 92078

TITLE: FLOW TRANSMITTER, ST75V, INTEGRAL, MALE NPT

SIZE	CAGE CODE	DWG NO.	REV
B	64818	004737	A

SCALE NONE SHEET 1 OF 1

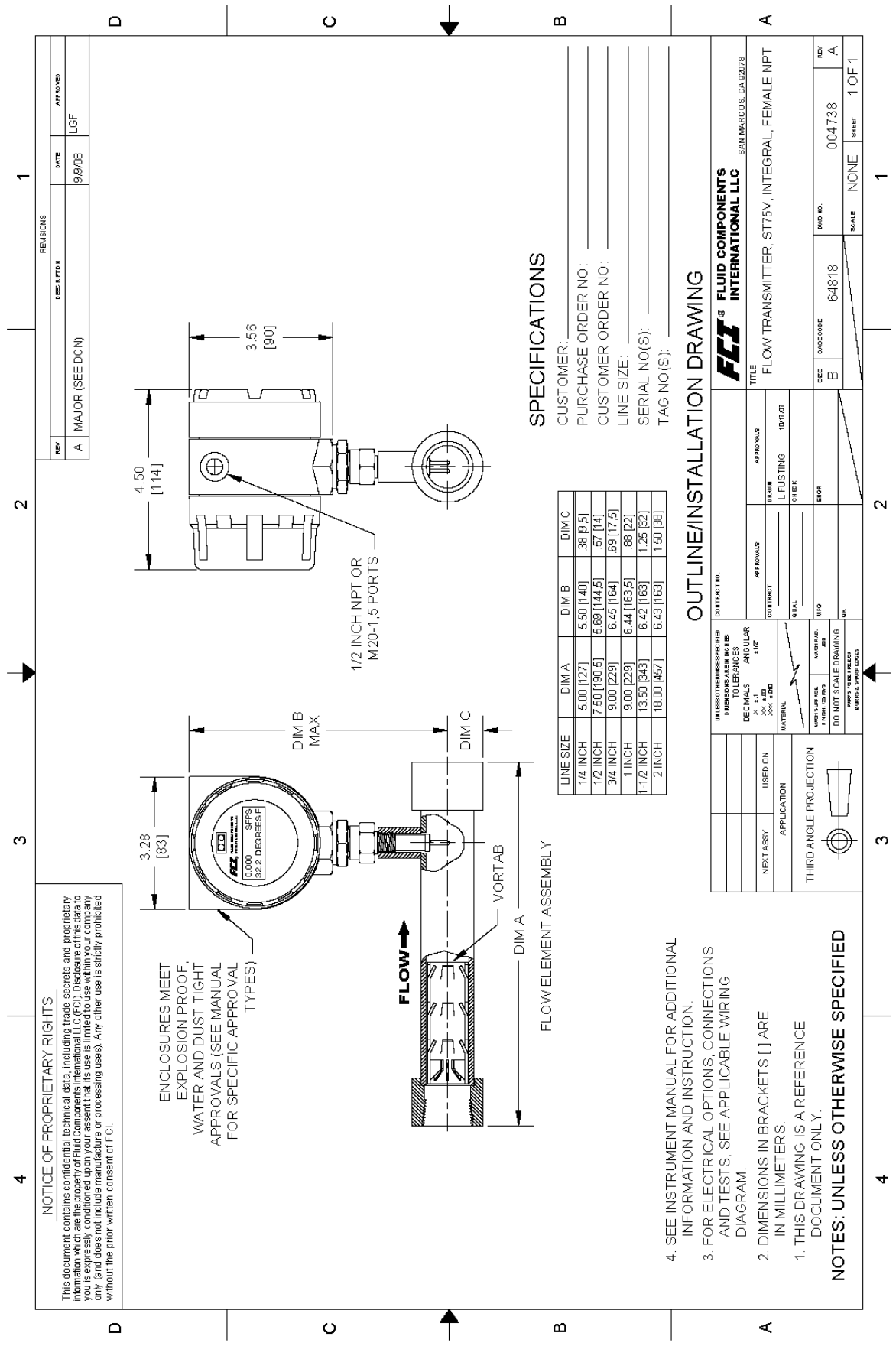
REVISIONS
REV
DESCRIPTION
DATE
APPROVED
A
MAJOR (SEE DCN)
9/8/08
LGF
NOTICE OF PROPRIETARY RIGHTS
This document contains confidential technical data, including trade secrets and proprietary information which are the property of Fluid Components International LLC (FCI). Disclosure of this data to you is expressly conditioned upon your assent that its use is limited to use within your company only (and does not include manufacture or processing uses). Any other use is strictly prohibited without the prior written consent of FCI.
NOTES: UNLESS OTHERWISE SPECIFIED
1. THIS DRAWING IS A REFERENCE DOCUMENT ONLY.
2. DIMENSIONS IN BRACKETS [ ] ARE IN MILLIMETERS.
3. FOR ELECTRICAL OPTIONS, CONNECTIONS AND TESTS, SEE APPLICABLE WIRING DIAGRAM.
4. SEE INSTRUMENT MANUAL FOR ADDITIONAL INFORMATION AND INSTRUCTION.
ENCLOSURES MEET EXPLOSION PROOF, WATER AND DUST TIGHT APPROVALS (SEE MANUAL FOR SPECIFIC APPROVAL TYPES)
3.28 [83]
DIM B MAX
DIM C
DIM A
VORTAB
FLOW
FLOW ELEMENT ASSEMBLY
4.50 [114]
3.56 [90]
1/2 INCH NPT OR M20-1,5 PORTS
LINE SIZE | DIM A | DIM B | DIM C
1/4 INCH | 5.00 [127] | 5.50 [140] | .38 [9.5]
1/2 INCH | 7.50 [190.5] | 5.69 [144.5] | .57 [14]
3/4 INCH | 9.00 [229] | 6.45 [164] | .69 [17.5]
1 INCH | 9.00 [229] | 6.44 [163.5] | .88 [22]
1-1/2 INCH | 13.50 [343] | 6.42 [163] | 1.25 [32]
2 INCH | 18.00 [457] | 6.43 [163] | 1.50 [38]
SPECIFICATIONS
CUSTOMER:
PURCHASE ORDER NO:
CUSTOMER ORDER NO:
LINE SIZE:
SERIAL NO(S):
TAG NO(S):
OUTLINE/INSTALLATION DRAWING
FLUID COMPONENTS INTERNATIONAL LLC
SAN MARCOS, CA 92078
FLOW TRANSMITTER, ST75V, INTEGRAL, FEMALE NPT
SIZE B
CAGE CODE 64818
DWG NO. 004738
REV A
SCALE NONE
SHEET 1 OF 1
NEXT ASSY
USED ON
APPLICATION
THIRD ANGLE PROJECTION
DO NOT SCALE DRAWING

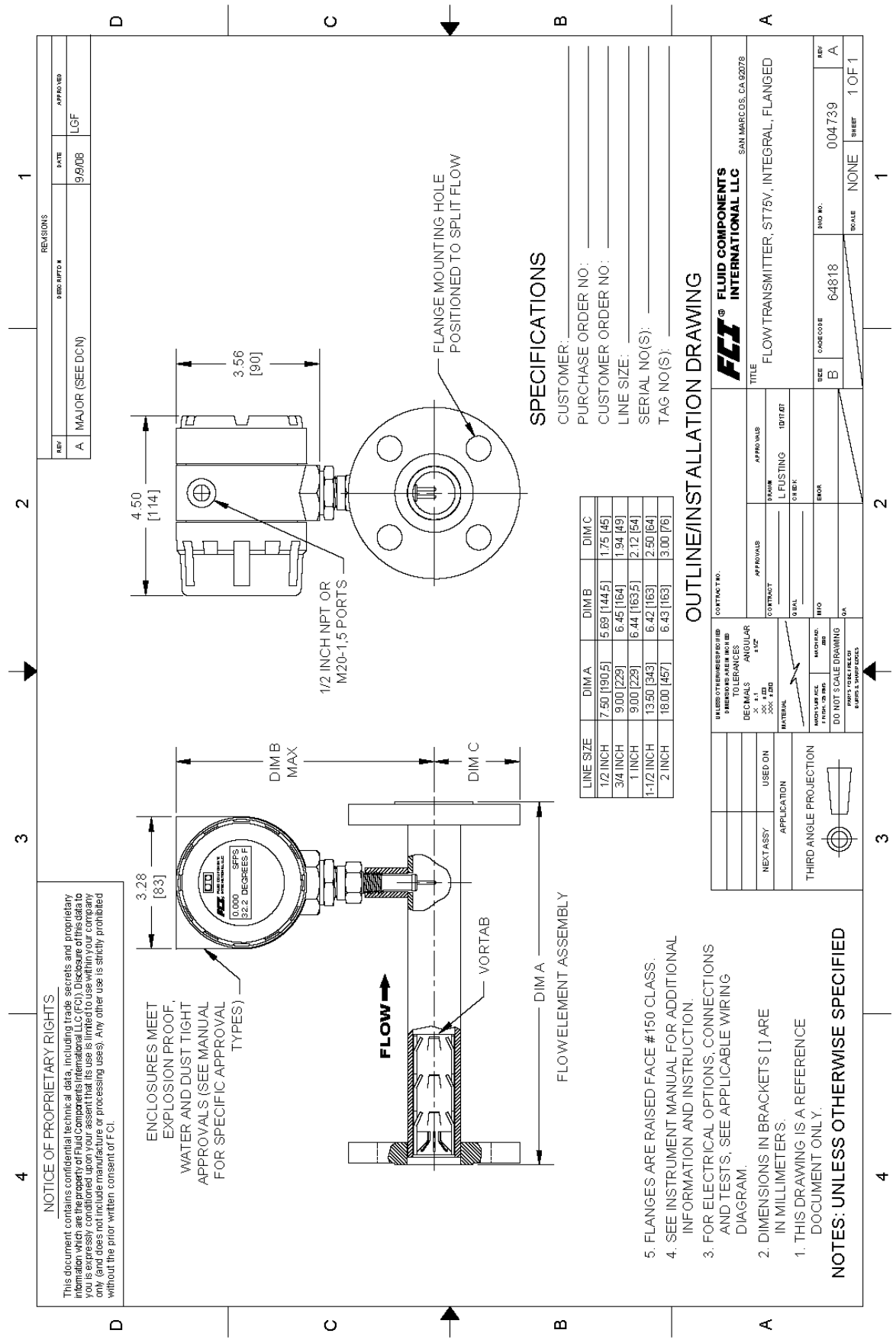
REVISIONS
REV
DESCRIPTION
DATE
APPROVED
A
MAJOR (SEE DCN)
9/4/08
LGF
NOTICE OF PROPRIETARY RIGHTS
This document contains confidential technical data, including trade secrets and proprietary information which are the property of Fluid Components International LLC (FCI). Disclosure of this data to you is expressly conditioned upon your assent that its use is limited to use within your company only (and does not include manufacture or processing uses). Any other use is strictly prohibited without the prior written consent of FCI.
NOTES: UNLESS OTHERWISE SPECIFIED
1. THIS DRAWING IS A REFERENCE DOCUMENT ONLY.
2. DIMENSIONS IN BRACKETS [ ] ARE IN MILLIMETERS.
3. FOR ELECTRICAL OPTIONS, CONNECTIONS AND TESTS, SEE APPLICABLE WIRING DIAGRAM.
4. SEE INSTRUMENT MANUAL FOR ADDITIONAL INFORMATION AND INSTRUCTION.
5. FLANGES ARE RAISED FACE #150 CLASS.
THIRD ANGLE PROJECTION
NEXT ASSY
USED ON
APPLICATION
DO NOT SCALE DRAWING
FLUID COMPONENTS INTERNATIONAL LLC
SAN MARCOS, CA 92078
TITLE
FLOWTRANSMITTER, ST75V, INTEGRAL, FLANGED
SIZE
B
CAGE CODE
64818
DWG NO.
004739
REV
A
SCALE
NONE
SHEET
1 OF 1
OUTLINE/INSTALLATION DRAWING
SPECIFICATIONS
CUSTOMER:
PURCHASE ORDER NO:
CUSTOMER ORDER NO:
LINE SIZE:
SERIAL NO(S):
TAG NO(S):
4.50 [114]
3.56 [90]
1/2 INCH NPT OR M20-1,5 PORTS
FLANGE MOUNTING HOLE POSITIONED TO SPLIT FLOW
3.28 [83]
ENCLOSURES MEET EXPLOSION PROOF, WATER AND DUST TIGHT APPROVALS (SEE MANUAL FOR SPECIFIC APPROVAL TYPES)
DIM B MAX
DIM C
DIM A
FLOW ELEMENT ASSEMBLY
FLOW
VORTAB
LINE SIZE | DIM A | DIM B | DIM C
1/2 INCH | 7.50 [190.5] | 5.69 [144.5] | 1.75 [45]
3/4 INCH | 9.00 [229] | 6.45 [164] | 1.94 [49]
1 INCH | 9.00 [229] | 6.44 [163.5] | 2.12 [54]
1-1/2 INCH | 13.50 [343] | 6.42 [163] | 2.50 [64]
2 INCH | 18.00 [457] | 6.43 [163] | 3.00 [76]

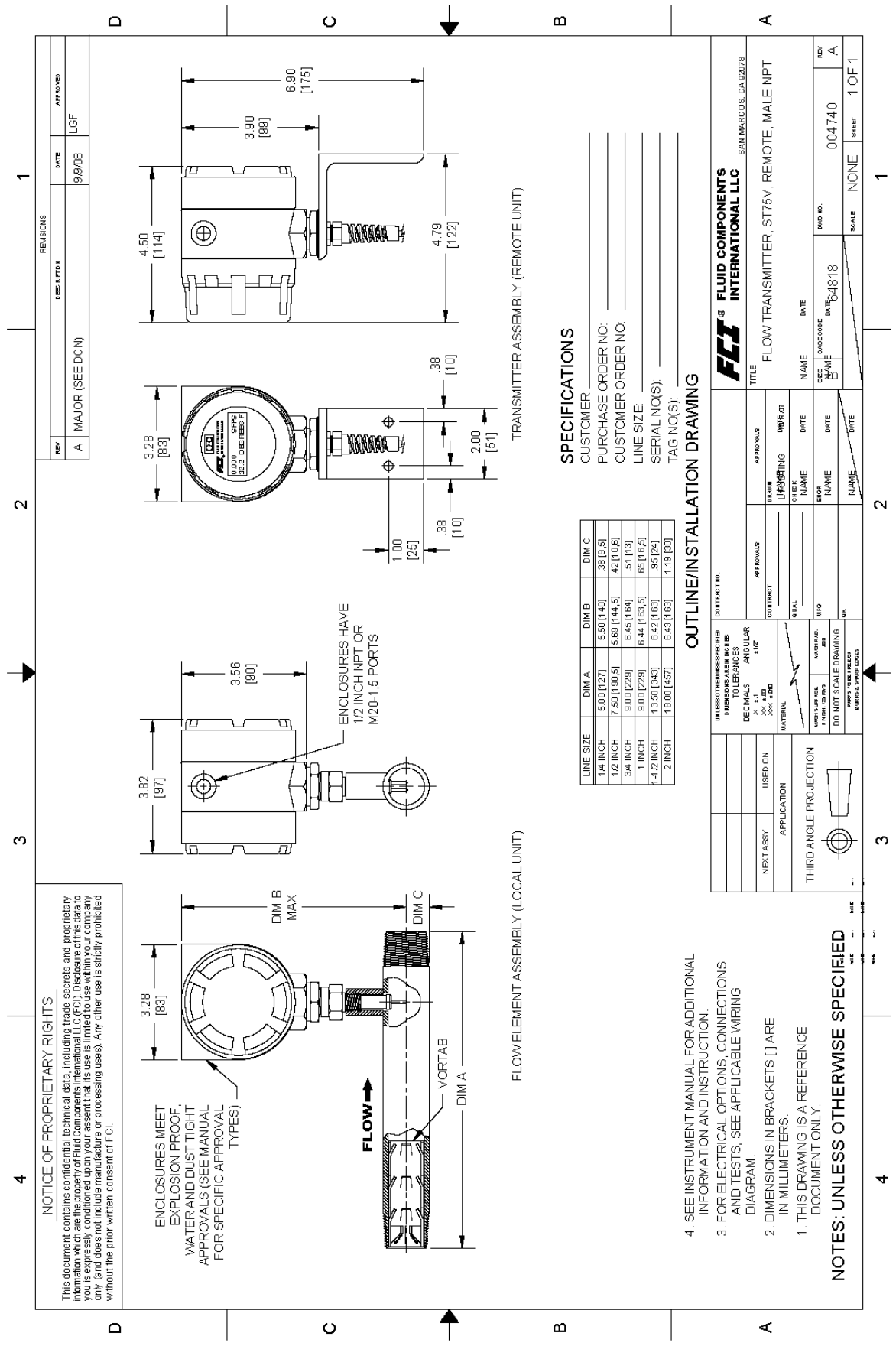
NOTICE OF PROPRIETARY RIGHTS
This document contains confidential technical data, including trade secrets and proprietary information which are the property of Fluid Components International LLC (FCI). Disclosure of this data to you is expressly conditioned upon your assent that its use is limited to use within your company only (and does not include manufacture or processing uses). Any other use is strictly prohibited without the prior written consent of FCI.
REVISIONS
REV
DESCRIPTION
DATE
APPROVED
A
MAJOR (SEE DCN)
9/9/08
LGF
ENCLOSURES MEET EXPLOSION PROOF, WATER AND DUST TIGHT APPROVALS (SEE MANUAL FOR SPECIFIC APPROVAL TYPES)
3.28 [83]
DIM B MAX
DIM C
FLOW
VORTAB
DIM A
FLOW ELEMENT ASSEMBLY (LOCAL UNIT)
3.82 [97]
3.56 [90]
ENCLOSURES HAVE 1/2 INCH NPT OR M20-1,5 PORTS
3.28 [83]
.38 [10]
2.00 [51]
1.00 [25]
.38 [10]
4.50 [114]
3.90 [99]
6.90 [175]
4.79 [122]
TRANSMITTER ASSEMBLY (REMOTE UNIT)
SPECIFICATIONS
CUSTOMER:
PURCHASE ORDER NO:
CUSTOMER ORDER NO:
LINE SIZE:
SERIAL NO(S):
TAG NO(S):
OUTLINE/INSTALLATION DRAWING
LINE SIZE | DIM A | DIM B | DIM C
1/4 INCH | 5.00 [127] | 5.50 [140] | .38 [9,5]
1/2 INCH | 7.50 [190,5] | 5.68 [144,5] | .42 [10,6]
3/4 INCH | 9.00 [229] | 6.45 [164] | .51 [13]
1 INCH | 9.00 [229] | 6.44 [163,5] | .65 [16,5]
1-1/2 INCH | 13.50 [343] | 6.42 [163] | .95 [24]
2 INCH | 18.00 [457] | 6.43 [163] | 1.19 [30]
4. SEE INSTRUMENT MANUAL FOR ADDITIONAL INFORMATION AND INSTRUCTION.
3. FOR ELECTRICAL OPTIONS, CONNECTIONS AND TESTS, SEE APPLICABLE WIRING DIAGRAM.
2. DIMENSIONS IN BRACKETS [ ] ARE IN MILLIMETERS.
1. THIS DRAWING IS A REFERENCE DOCUMENT ONLY.
NOTES: UNLESS OTHERWISE SPECIFIED
NEXT ASSY
USED ON
APPLICATION
THIRD ANGLE PROJECTION
DO NOT SCALE DRAWING
FLUID COMPONENTS INTERNATIONAL LLC
SAN MARCOS, CA 92078
TITLE
FLOW TRANSMITTER, ST75V, REMOTE, MALE NPT
NAME
DATE
SIZE
CAGE CODE
DWG NO.
REV
B
64818
004740
A
SCALE
NONE
SHEET
1 OF 1

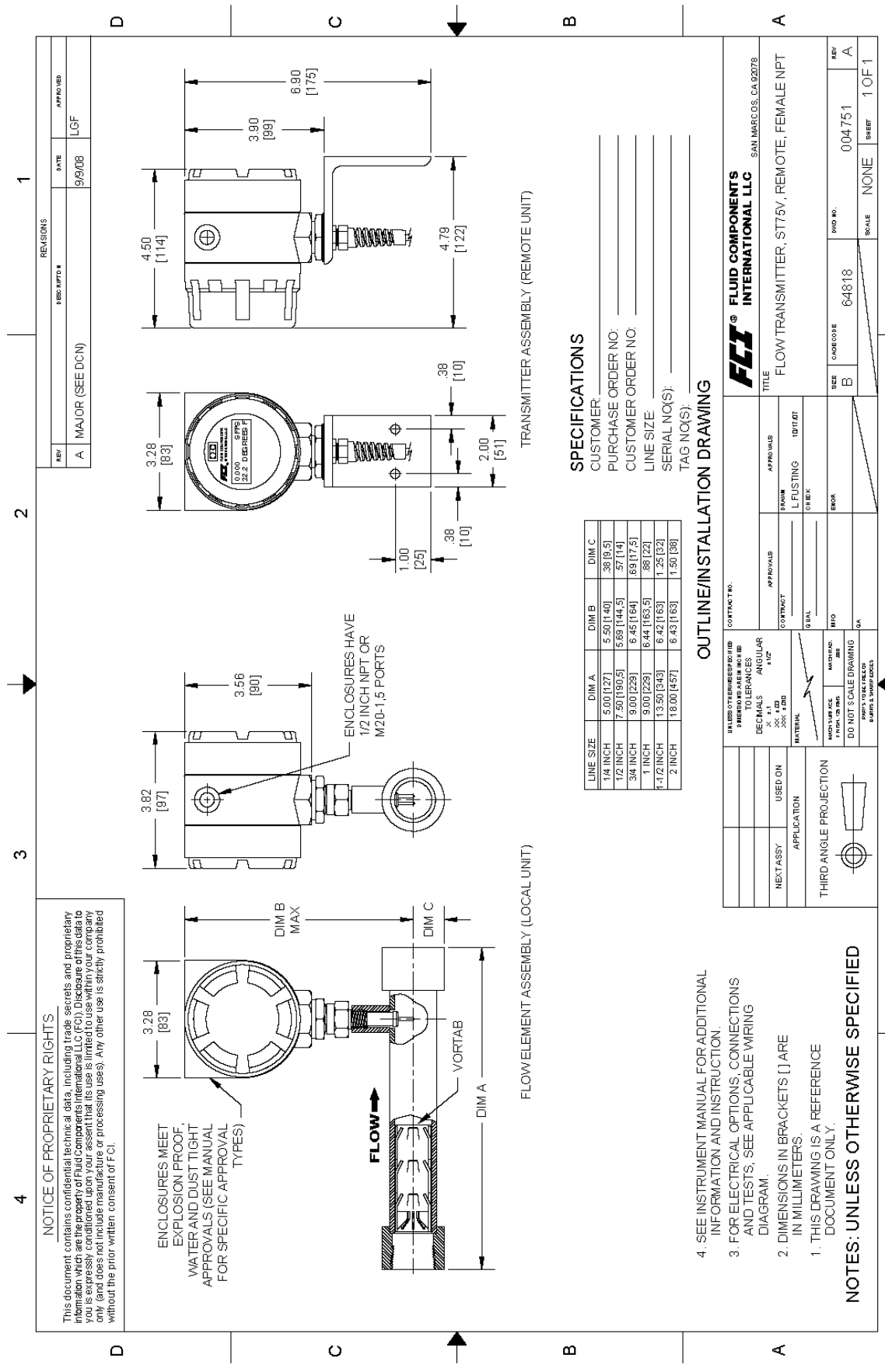
REVISIONS
REV
DESCRIPTION
DATE
APPROVED
A
MAJOR (SEE DCN)
9/9/08
LGF
NOTICE OF PROPRIETARY RIGHTS
This document contains confidential technical data, including trade secrets and proprietary information which are the property of Fluid Components International LLC (FCI). Disclosure of this data to you is expressly conditioned upon your assent that its use is limited to use within your company only (and does not include manufacture or processing uses). Any other use is strictly prohibited without the prior written consent of FCI.
ENCLOSURES MEET EXPLOSION PROOF, WATER AND DUST TIGHT APPROVALS (SEE MANUAL FOR SPECIFIC APPROVAL TYPES)
3.28 [83]
DIM B MAX
DIM C
FLOW
VORTAB
DIM A
FLOW ELEMENT ASSEMBLY (LOCAL UNIT)
3.82 [97]
3.56 [90]
ENCLOSURES HAVE 1/2 INCH NPT OR M20-1,5 PORTS
1.00 [25]
.38 [10]
3.28 [83]
.38 [10]
2.00 [51]
4.50 [114]
3.90 [99]
6.90 [175]
4.79 [122]
TRANSMITTER ASSEMBLY (REMOTE UNIT)
LINE SIZE | DIM A | DIM B | DIM C
1/4 INCH | 5.00 [127] | 5.50 [140] | .38 [9.5]
1/2 INCH | 7.50 [190.5] | 5.69 [144.5] | .57 [14]
3/4 INCH | 9.00 [229] | 6.45 [164] | .69 [17.5]
1 INCH | 9.00 [229] | 6.44 [163.5] | .88 [22]
1-1/2 INCH | 13.50 [343] | 6.42 [163] | 1.25 [32]
2 INCH | 18.00 [457] | 6.43 [163] | 1.50 [38]
SPECIFICATIONS
CUSTOMER:
PURCHASE ORDER NO:
CUSTOMER ORDER NO:
LINE SIZE:
SERIAL NO(S):
TAG NO(S):
OUTLINE/INSTALLATION DRAWING
4. SEE INSTRUMENT MANUAL FOR ADDITIONAL INFORMATION AND INSTRUCTION.
3. FOR ELECTRICAL OPTIONS, CONNECTIONS AND TESTS, SEE APPLICABLE WIRING DIAGRAM.
2. DIMENSIONS IN BRACKETS [ ] ARE IN MILLIMETERS.
1. THIS DRAWING IS A REFERENCE DOCUMENT ONLY.
NOTES: UNLESS OTHERWISE SPECIFIED
THIRD ANGLE PROJECTION
NEXT ASSY
USED ON
APPLICATION
UNLESS OTHERWISE SPECIFIED DIMENSIONS ARE IN INCHES TOLERANCES DECIMALS ANGULAR
MATERIAL
CONTRACT NO.
APPROVALS
CONTRACT
QUAL
ENGR
MFG
QA
DRAWN
L FUSTING 10/07/07
CHECK
FLUID COMPONENTS INTERNATIONAL LLC
SAN MARCOS, CA 92078
TITLE
FLOW TRANSMITTER, ST75V, REMOTE, FEMALE NPT
SIZE B
CAGE CODE 64818
DWG NO. 004751
REV A
SCALE NONE
SHEET 1 OF 1
DO NOT SCALE DRAWING

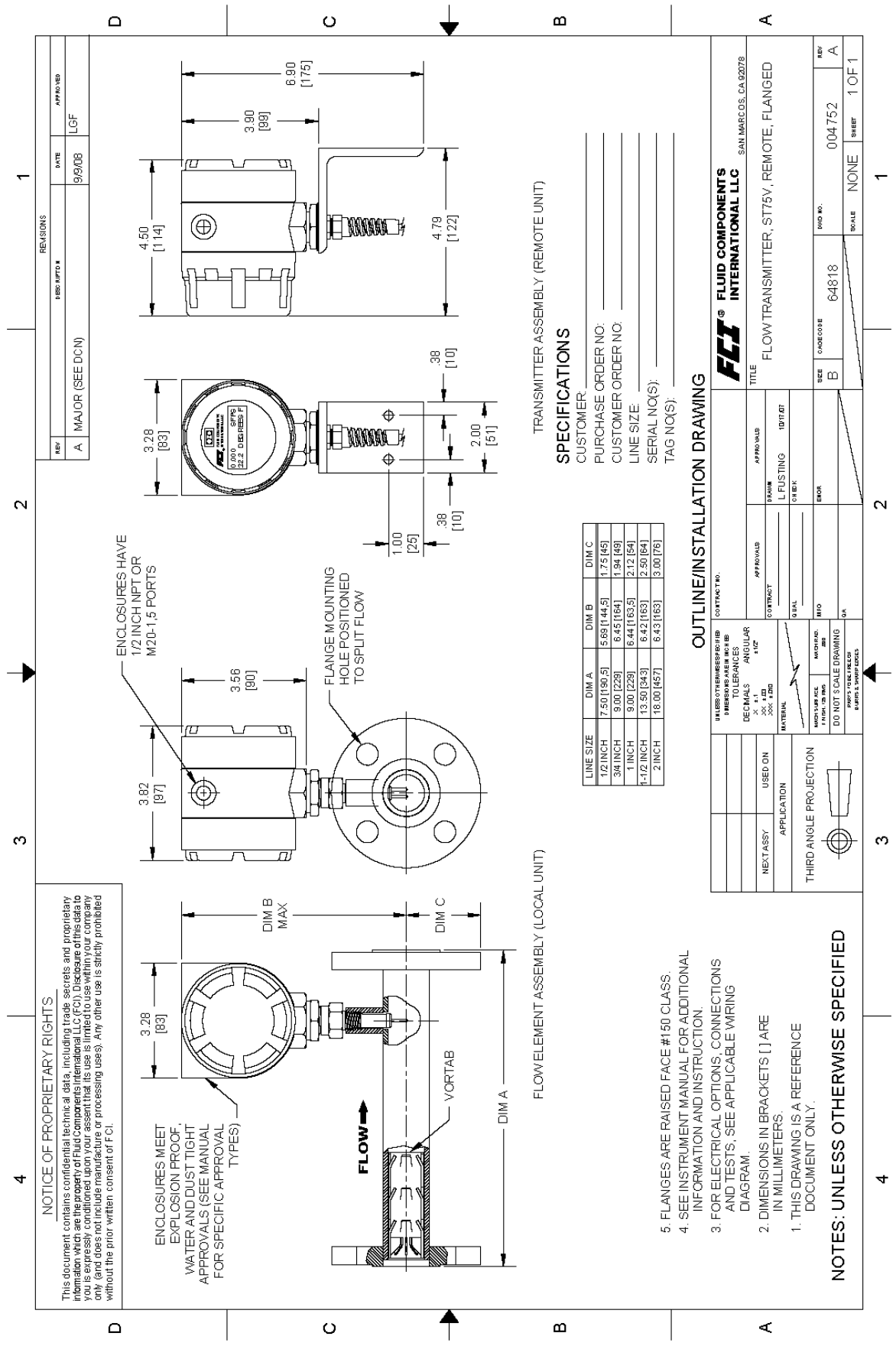
NOTES: UNLESS OTHERWISE SPECIFIED
1. THIS DRAWING IS A REFERENCE DOCUMENT ONLY.
2. DIMENSIONS IN BRACKETS [ ] ARE IN MILLIMETERS.
3. FOR ELECTRICAL OPTIONS, CONNECTIONS AND TESTS, SEE APPLICABLE WIRING DIAGRAM.
4. SEE INSTRUMENT MANUAL FOR ADDITIONAL INFORMATION AND INSTRUCTION.
5. FLANGES ARE RAISED FACE #150 CLASS.
FLOW ELEMENT ASSEMBLY (LOCAL UNIT)
TRANSMITTER ASSEMBLY (REMOTE UNIT)
ENCLOSURES MEET EXPLOSION PROOF, WATER AND DUST TIGHT APPROVALS (SEE MANUAL FOR SPECIFIC APPROVAL TYPES)
ENCLOSURES HAVE 1/2 INCH NPT OR M20-1.5 PORTS
FLANGE MOUNTING HOLE POSITIONED TO SPLIT FLOW
FLOW
VORTAB
DIM A
DIM B MAX
DIM C
3.28 [83]
3.82 [97]
3.56 [90]
1.00 [25]
.38 [10]
2.00 [51]
4.50 [114]
4.79 [122]
3.90 [99]
6.90 [175]
LINE SIZE | DIM A | DIM B | DIM C
1/2 INCH | 7.50 [190.5] | 5.69 [144.5] | 1.75 [45]
3/4 INCH | 9.00 [229] | 6.45 [164] | 1.94 [49]
1 INCH | 9.00 [229] | 6.44 [163.5] | 2.12 [54]
1-1/2 INCH | 13.50 [343] | 6.42 [163] | 2.50 [64]
2 INCH | 18.00 [457] | 6.43 [163] | 3.00 [76]
SPECIFICATIONS
CUSTOMER:
PURCHASE ORDER NO:
CUSTOMER ORDER NO:
LINE SIZE:
SERIAL NO(S):
TAG NO(S):
OUTLINE/INSTALLATION DRAWING
FLUID COMPONENTS INTERNATIONAL LLC
SAN MARCOS, CA 92078
FLOW TRANSMITTER, ST75V, REMOTE, FLANGED
64818
004752
A
NONE
1 OF 1
THIRD ANGLE PROJECTION
DO NOT SCALE DRAWING
NOTICE OF PROPRIETARY RIGHTS
This document contains confidential technical data, including trade secrets and proprietary information which are the property of Fluid Components International LLC (FCI). Disclosure of this data to you is expressly conditioned upon your assent that its use is limited to use within your company only (and does not include manufacture or processing uses). Any other use is strictly prohibited without the prior written consent of FCI.
REVISIONS
REV | DESCRIPTION | DATE | APPROVED
A | MAJOR (SEE DCN) | 9/9/08 | LGF

NOTICE OF PROPRIETARY RIGHTS

This document contains confidential technical data, including trade secrets and proprietary information, which is property of Fluid Components International LLC (FCI). Disclosure of this data to you is expressly conditional upon your assent that its use is limited to use within your company only (and does not include manufacture or processing uses). Any other use is strictly prohibited without prior written consent of FCI.

REVISION		
REV	DESCRIPTION	DATE
A	INITIAL RELEASE	8/2/2016

025611-XXX

DASH NO.	INPUT POWER	UNIT TYPE	NOTES
01A	DC	INTEGRAL	SEE SHEET 1
01B		REMOTE	SEE SHEET 2
02A	AC	INTEGRAL	SEE SHEET 3
02B		REMOTE	SEE SHEET 4

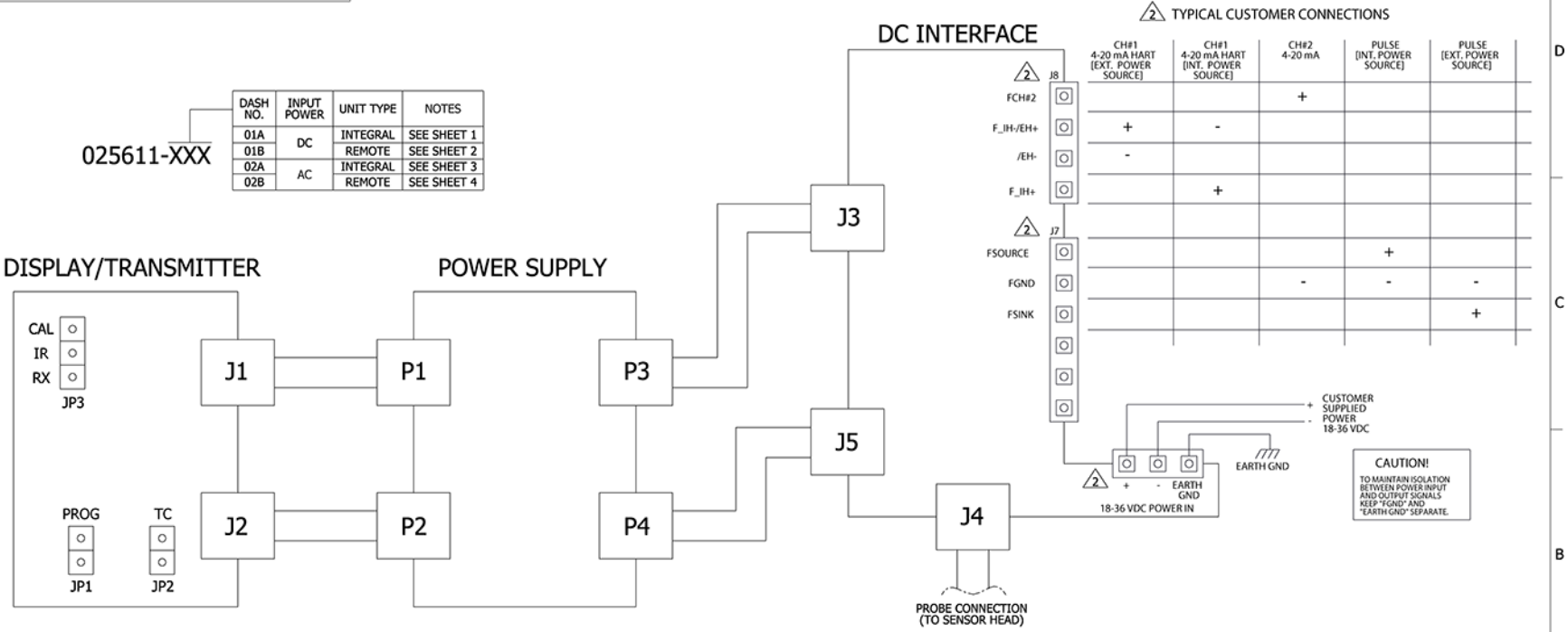

025611-01A INTEGRAL DC CONFIG SHOWN WIRING DIAGRAM

2 TYPICAL CUSTOMER CONNECTIONS.

1. INTERPRET DIMENSIONING AND TOLERANCING IN ACCORDANCE WITH ASME Y14.5 - 2009.

NOTES: UNLESS OTHERWISE SPECIFIED

NEXT ASSY | USED ON
APPLICATION
THIRD ANGLE PROJECTION

UNLESS OTHERWISE SPECIFIED DIMENSIONS ARE IN INCHES
TOLERANCES
DECIMALS X ±.1 XX ±.03 XXX ±.010
ANGULAR ±1/2°
MATERIAL
MACH. SURFACE FINISH 125 MIN MAX
MACH. BAD EDGE
DO NOT SCALE DRAWING
PARTS TO BE FREE OF BURRS & SHARP EDGES

APPROVALS		
PRODUCT CERT APVL	N/A	
CONTRACT	N/A	
MFG ENGR	Steve Reed	8/10/2016
MATL MGMT	Donna Ogle	8/10/2016
MFG	N/A	
QA	Burt Tanaka	8/10/2016

APPROVALS		
DRAWN	Matt Hall	8/10/2016
CHECK	Jim Holloway	8/10/2016
ENGR	Marshal Haupt	8/10/2016
ENGR	N/A	
AGNCY QUAL	N/A	
NUC QUAL	N/A	

FCI® FLUID COMPONENTS INTERNATIONAL LLC
SAN MARCOS, CA 92078

TITLE: WIRING DIAGRAM, THIRD GENERATION, ST51A/ST75A/ST75AV

SIZE	CAGE CODE	DWG NO.	REV
D	64818	025611	A

SCALE NONE SHEET 1 OF 4

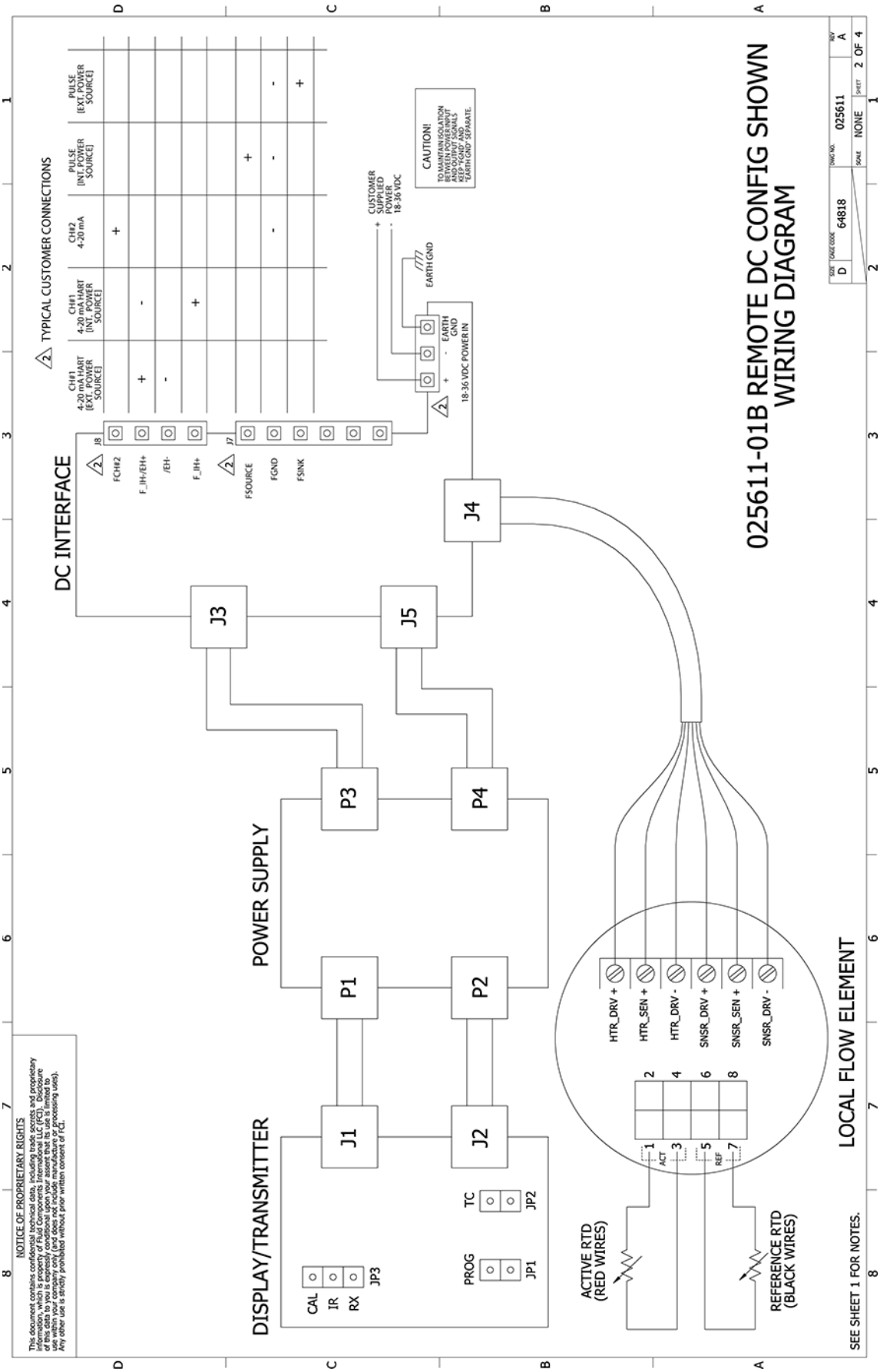
025611-01B REMOTE DC CONFIG SHOWN
WIRING DIAGRAM
DC INTERFACE
TYPICAL CUSTOMER CONNECTIONS
CH1 4-20 mA HART [EXT. POWER SOURCE]
CH1 4-20 mA HART [INT. POWER SOURCE]
CH#2 4-20 mA
PULSE [INT. POWER SOURCE]
PULSE [EXT. POWER SOURCE]
FCH#2
F_IH-/EH+
/EH-
F_IH+
FSOURCE
FGND
FSINK
CUSTOMER SUPPLIED POWER 18-36 VDC
EARTH GND
18-36 VDC POWER IN
CAUTION!
TO MAINTAIN ISOLATION BETWEEN POWER INPUT AND OUTPUT SIGNALS KEEP "FGND" AND "EARTH GND" SEPARATE.
J1
J2
J3
J4
J5
P1
P2
P3
P4
POWER SUPPLY
DISPLAY/TRANSMITTER
CAL
IR
RX
JP3
PROG
JP1
TC
JP2
LOCAL FLOW ELEMENT
HTR_DRV +
HTR_SEN +
HTR_DRV -
SNSR_DRV +
SNSR_SEN +
SNSR_DRV -
ACT
REF
ACTIVE RTD (RED WIRES)
REFERENCE RTD (BLACK WIRES)
SEE SHEET 1 FOR NOTES.
NOTICE OF PROPRIETARY RIGHTS
SIZE D
CAGE CODE 64818
DWG NO 025611
REV A
SCALE NONE
SHEET 2 OF 4

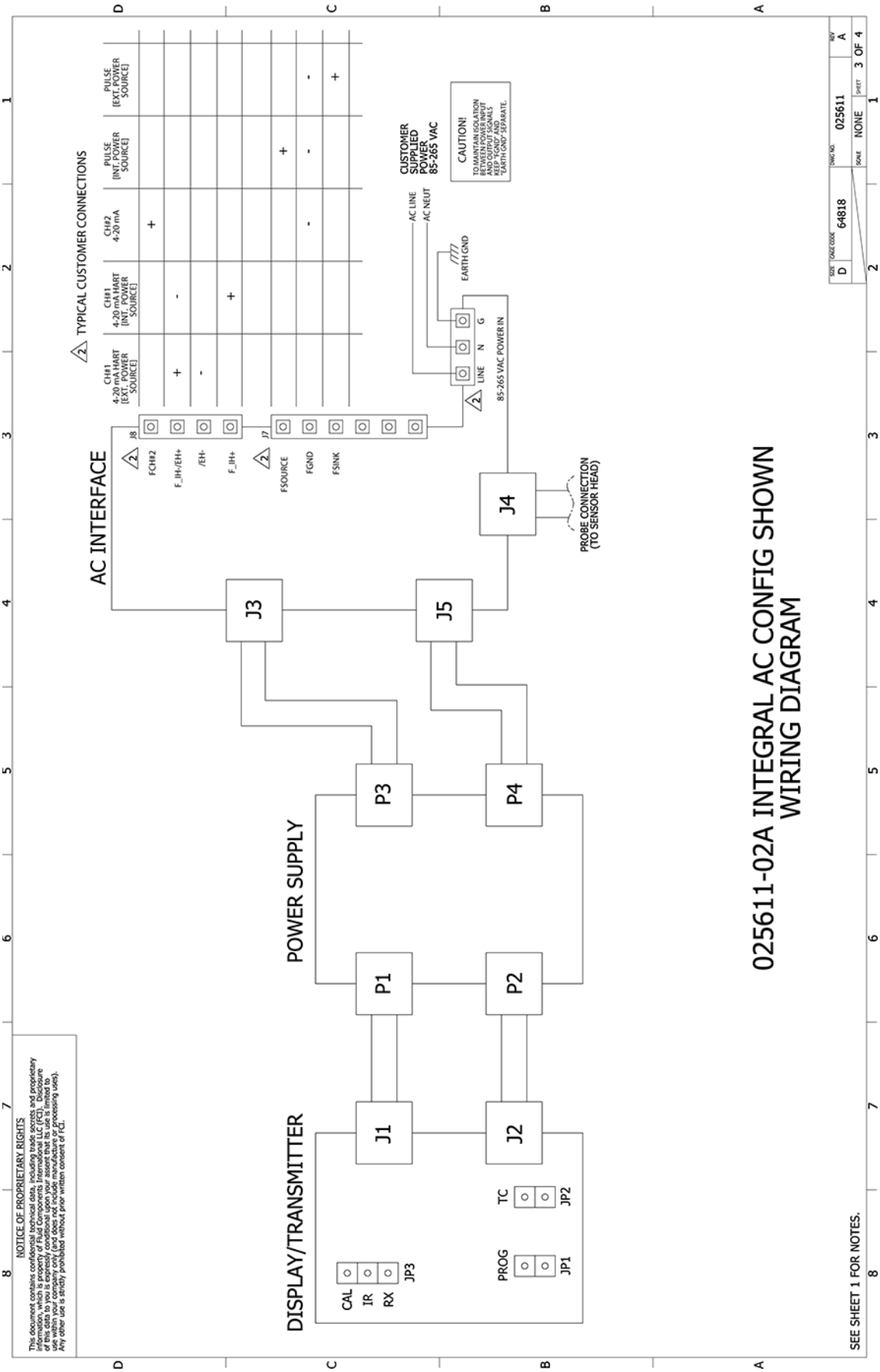
NOTICE OF PROPRIETARY RIGHTS
This document contains confidential technical data, including trade secrets and proprietary information which is the property of Fluid Components International LLC ("FCI"). Disclosure of this data to you is expressly conditioned upon your assent that its use is limited to use within your company only (and does not include manufacture or processing uses). Any other use is strictly prohibited without prior written consent of FCI.
TYPICAL CUSTOMER CONNECTIONS
CH#1 4-20 mA HART [EXT. POWER SOURCE]
CH#1 4-20 mA HART [INT. POWER SOURCE]
CH#2 4-20 mA
PULSE [INT. POWER SOURCE]
PULSE [EXT. POWER SOURCE]
AC INTERFACE
J8
J7
FCH#2
F_IH-/EH+
/EH-
F_IH+
FSOURCE
FGND
FSINK
LINE
N
G
85-265 VAC POWER IN
AC LINE
AC NEUT
EARTH GND
CUSTOMER SUPPLIED POWER 85-265 VAC
CAUTION!
TO MAINTAIN ISOLATION BETWEEN POWER INPUT AND OUTPUT SIGNALS KEEP "FGND" AND "EARTH GND" SEPARATE.
J3
J5
J4
PROBE CONNECTION (TO SENSOR HEAD)
POWER SUPPLY
P3
P4
P1
P2
DISPLAY/TRANSMITTER
J1
J2
CAL
IR
RX
JP3
PROG
JP1
TC
JP2
025611-02A INTEGRAL AC CONFIG SHOWN WIRING DIAGRAM
SEE SHEET 1 FOR NOTES.
SIZE D
CAGE CODE 64818
DWG NO 025611
REV A
SCALE NONE
SHEET 3 OF 4

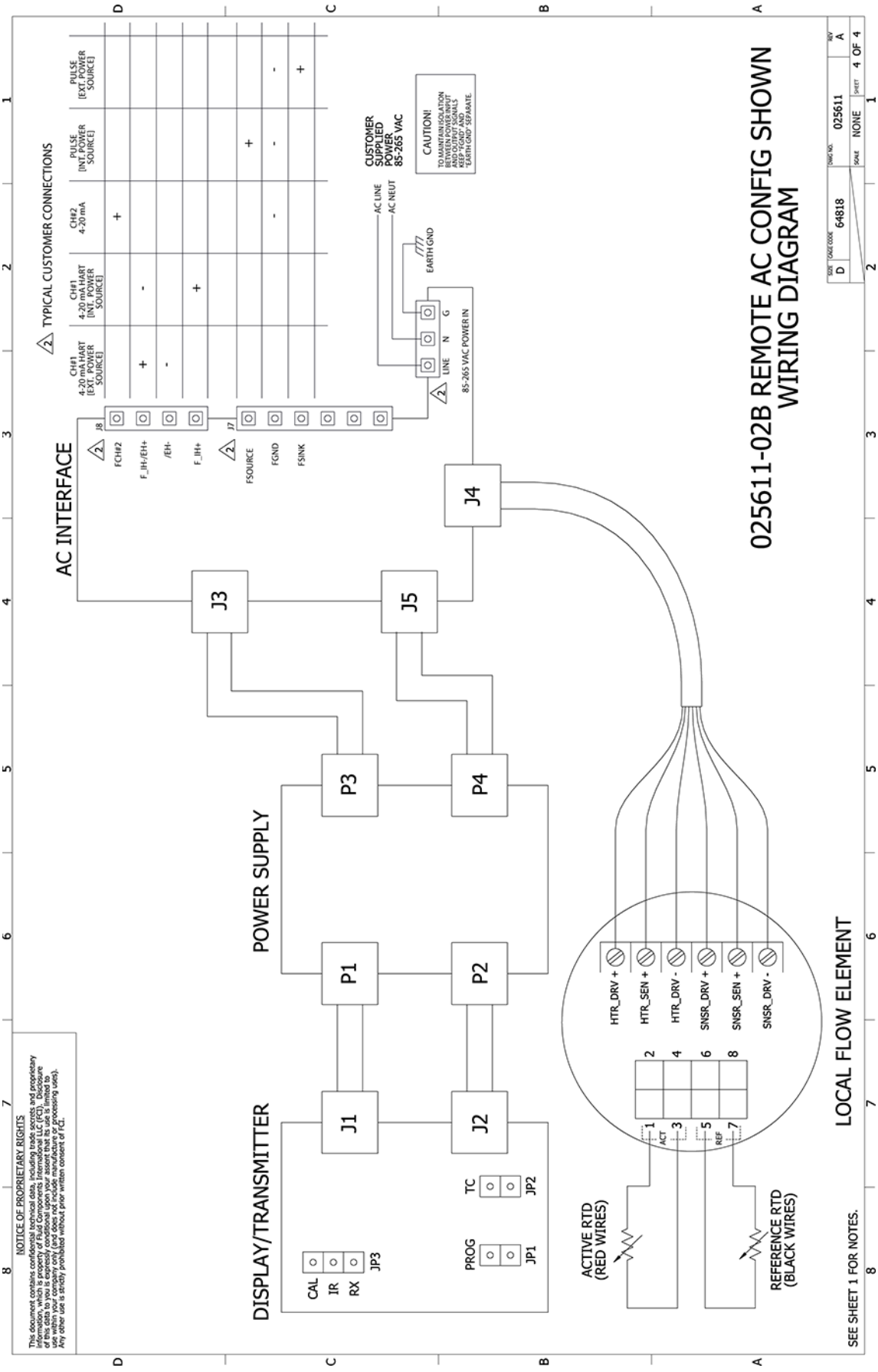
025611-02B REMOTE AC CONFIG SHOWN
WIRING DIAGRAM
LOCAL FLOW ELEMENT
DISPLAY/TRANSMITTER
POWER SUPPLY
AC INTERFACE
TYPICAL CUSTOMER CONNECTIONS
CUSTOMER SUPPLIED POWER 85-265 VAC
CAUTION!
TO MAINTAIN ISOLATION BETWEEN SYSTEM AND EARTH GND, KEEP "FGND" AND "EARTH GND" SEPARATE.
85-265 VAC POWER IN
LINE N G
AC LINE
AC NEUT
EARTH GND
CH#1 4-20 mA HART [EXT. POWER SOURCE]
CH#1 4-20 mA HART [INT. POWER SOURCE]
CH#2 4-20 mA
PULSE [INT. POWER SOURCE]
PULSE [EXT. POWER SOURCE]
FCH#2
F_IH-/EH+
/EH-
F_IH+
FSOURCE
FGND
FSINK
J1
J2
J3
J4
J5
J7
J8
P1
P2
P3
P4
JP1
JP2
JP3
PROG
TC
CAL
IR
RX
HTR_DRV +
HTR_SEN +
HTR_DRV -
SNSR_DRV +
SNSR_SEN +
SNSR_DRV -
ACT
REF
ACTIVE RTD (RED WIRES)
REFERENCE RTD (BLACK WIRES)
SEE SHEET 1 FOR NOTES.
NOTICE OF PROPRIETARY RIGHTS
64818
025611
NONE
4 OF 4

APPENDIX B GLOSSARY

Abbreviations

Delta-**R (ΔR)**	Resistance differential
Delta-**T (ΔT)**	Temperature differential
DMM	Digital Multimeter
FCI	Fluid Components International
HTR	Heater
LCD	Liquid Crystal Display
LED	Light Emitting Diode
OIS	Ordering Information Sheet
RA	Repair Authorization
RTD	Resistance Temperature Detector
SFPS	Standard Feet Per Second

Definitions

Active RTD	The sensing element that is heated by the heater. The active RTD is cooled due to increases in the process fluid flow rate or density (level sensing).
Control circuit	The portion of the level switch that conditions, converts, and scales the sensing point (head) signal.
Level element	The portion of the level switch that contains the sensing points and process connection.
Heater (HTR)	The part of the sensing element that heats the active RTD.
Local enclosure	The enclosure attached to the level element.
Reference RTD	The level element part that senses the fluid temperature.
Resistance differential Delta-**R (ΔR)**	The difference in resistance between the active and reference RTDs.
Resistance Temperature Detector (RTD)	A sensor whose resistance changes proportionally to detector temperature changes.
Sensing element	The transducer portion of the instrument. The sensing element produces an electrical signal that is related to the flow rate, density (level sensing), and temperature of the process media.
Temperature differential Delta-**T (ΔT)**	The difference in temperature between the active and reference RTDs.
Thermowell	The sensor element part that protects the heater and RTDs from the process media.
Turndown ratio	The ratio of minimum flow rate to maximum flow rate.

This Page Intentionally Left Blank

APPENDIX C APPROVAL INFORMATION

EU Information

FLUID COMPONENTS INTERNATIONAL LLC

EU DECLARATION OF CONFORMITY ST51 SERIES

We, *Fluid Components International LLC*, located at 1755 La Costa Meadows Drive, San Marcos, California 92078-5115 USA, declare under our sole responsibility that the **ST51 Flowmeter Product Family** (ST51, ST75, ST75V, ST51A, ST75A, ST75AV), to which this declaration relates, are in conformity with the following standards and Directives.

Directive 2014/34/EU ATEX

Certified by FM Approvals LLC (1725): 1151 Boston-Providence Turnpike, Norwood, MA 02062, USA

EC-Type Examination Certificate:

FM16ATEX0008X satisfies EN 60079-0:2012/A11:2013, EN 60079-1:2014, EN 60079-31:2014 and EN 60529:1991 +A2:2013 requirements for use in hazardous areas.

Hazardous Areas Approval FM16ATEX0008X
II 2 G Ex db IIC T6…T1 Gb
II 2 D Ex tb IIIC T85°C…T300°C Db; IP66/IP67
Ta = -40°C to +65°C

Directive 2014/30/EU EMC

Immunity specification: EN 61000-6-2: 2005
Emissions specification: EN 61000-6-4: 2007, +A1:2011

Directive 2014/35/EU Low Voltage

Electrical Safety Specification: EN 61010-1: 2010 +C1: 2011 +C2: 2013

Directive 2014/68/EU Pressure Equipment (PED)

The ST51/ST51A (Insertion Style) models do not have a pressure bearing housing and are therefore not considered as pressure equipment by themselves according to article 2, paragraph 5.
The ST75/ST75A, ST75V/ST75AV (In-line Style) models are in conformity with Sound Engineering Practices as defined in the Pressure Equipment Directive (PED) 2014/68/EU article 4, paragraph 3.

Directive 2011/65/EU RoHS 2

The ST51 Product Family is in conformity with Directive 2011/65/EU of the European Parliament and of the Council of 8 June 2011 on the restriction of the use of certain hazardous substances in electrical and electronic equipment.

Issued at San Marcos, California USA
June, 2016

Manuel Liong
2016.06.21 18:00:33
-07'00'

Manuel Liong, Qualifications Engineer

Flow/Liquid Level/Temperature Instrumentation
Visit FCI on the Worldwide Web: www.fluidcomponents.com
1755 La Costa Meadows Drive, San Marcos, California 92078 USA 760-744-6950 • 800-854-1993 • 760-736-6250
European Office: Persephonestraat 3-01 5047 TTTilburg – The Netherlands – Phone 31-13-5159989 • Fax 31-13-5799036

Doc no. 23EN000019E

Specific Conditions of Use per FM16ATEX0008X

1. The ambient temperature range and applicable temperature class of the sensor probe is based on the maximum process temperature for the particular application as follows; T6…T1 for $T_{ambient}$ of -40 °C to +65 and $T_{process}$ of -40 °C to +260 °C. Probe assembly design temperatures are part number dependent. Low temperature models have design temperatures from -40°C to +121°C. Medium temperature models have design temperatures from -40 °C to +260 °C.
2. Process Temperature: Maximum process temperature range is -40 °C to +260 °C. Process temperature varies for flow element installed. The relationship between the temperature class, the maximum surface temperature and the process temperature is as follows:

   Sensing Element:

   T6 / T85°C for a process temperature range of -40 °C to +39 °C.

   T5 / T100°C for a process temperature range of -40 °C to +54 °C.

   T4 / T135°C for a process temperature range of -40 °C to +89 °C.

   T3 / T200°C for a process temperature range of -40 °C to +154 °C.

   T2 / T300°C for a process temperature range of -40 °C to +177 °C.

   T1 for a process temperature range of -40 °C to +260 °C.
3. Consult the manufacturer if dimensional information on the flameproof joints is necessary.
4. The painted surfaces of the Mass Flow Meter may store electrostatic charge and become a source of ignition in applications with a low relative humidity <~30% relative humidity where the painted surface is relatively free of surface contamination such as dirt, dust, or oil. Guidance on protection against the risk of ignition due to electrostatic discharge can be found in IEC TR60079-32 (in preparation). Cleaning of the painted/unpainted surface should only be done with a damp cloth.
5. The probe when remotely located from the enclosure has flying lead conductors that requires the remote probe to be connected to a suitably certified Ex d or Ex e terminal box for connecting to the external supply circuit.
6. Customer to supply wire rated 10 °C minimum above maximum ambient temperature of installation location to a suitably certified Ex d or Ex e terminal box.

Safety Instructions for the use of the ST51A/ST75A/ST75AV flow meter in Hazardous Areas Approval FM16ATEX0008X/IECEX FMG 16.0009X:

Category II 2 G for Gas protection Ex db IIC T6...T1 Gb
Category II 2 D for Dust protection Ex tb IIIC T85°C...T300°C Db; IP66/IP67

The ST51/75 series consist of a sensing element and associated integral or remote mounted electronics mounted in a type “d” flameproof enclosure.

Relation between ambient temperature, process temperature and temperature class is as

follows: Ambient temperature range (Ta): T6/T85°C for : -40ºC <Ta< + 65ºC

Process temperature range (Tp):
T6 / T85°C: -40°C < Tp < +39°C
T5 / T100°C: -40°C <Tp < +54°C
T4 / T135°C: -40°C < Tp < +89°C
T3 / T200°C: -40°C < Tp < +154°C
T2 / T300°C: -40°C < Tp < +177°C
T1: -40°C < Tp < +260°C

Electrical data: Power supply: 85 to 265 VAC, 50/60 Hz, 12 Watt max; 24 VDC, 12 VA Max

Dansk	Sikkerhedsforskrifter	Italiano	Normative di sicurezza
Deutsch	Sicherheitshinweise	Nederlands	Veiligheidsinstructies
English	Safety instructions	Português	Normas de segurança
Υπ	Υπ_δεί_εις ασφαλείας	Español	Instrucciones de seguridad
Suomi	Turvallisuusohjeet	Svenska	Säkerhetsanvisningar
Français	Consignes de sécurité		

DK Dansk - Sikkerhedsforskrifter

Disse sikkerhedsforskrifter gælder for Fluid Components, ST51A/75A/75AV EF-typeafprøvningsattest-nr. FM16ATEX0008X/IECEX FMG 16.0009X (attestens nummer på typeskiltet) er egnet til at blive benyttet i eksplosiv atmosfære kategori II 2 GD.
1) Ex-anlæg skal principielt opstilles af specialiseret personale.
2) ST51/75 skal jordforbindes.
3) Klemmerne og elektronikken er monteret i et hus, som er beskyttet af en eksplosionssikker kapsling med følgende noter:
• Gevindspalten mellem huset og låget er på en sådan måde, at ild ikke kan brede sig inden i det.
• Ex-„d“ tilslutningshuset er forsynet med et 1/2" NPT og/eller M20x1.5 gevind for montering af en Ex-„d“ kabelindføring, der er attesteret iht. IEC/EN 60079-1
• Det er vigtigt at sørge for, at forsyningsledningen er uden spænding eller eksplosiv
atmosfære ikke er til stede, før låget åbnes og når låget er åbent på „d” huset (f.eks. ved tilslutning eller servicearbejde).
• Låget på „d” huset skal være skruet helt ind, når apparatet er i brug. Det skal sikres ved at dreje en af låseskruerne på låget ud.

DA Deutsch - Sicherheitshinweise

Diese Sicherheitshinweise gelten für die Fluid Components, ST51A/75A/75AV flow meter gemäß der EG-Baumusterprüfbescheinigung Nr. FM16ATEX0008X/IECEX FMG 16.0009X (Bescheinigungsnummer auf dem Typschild) der Kategorie II 2 GD.
1) Die Errichtung von Ex-Anlagen muss grundsätzlich durch Fachpersonal vorgenommen werden.
2) Der ST51/75 muß geerdet werden.
3) Die Klemmen und Elektroniken sind in einem Gehäuse in der Zündschutzart druckfeste Kapselung („d“) eingebaut.
• Der Gewindespalt zwischen dem Gehäuse und dem Deckel ist ein zünddurchschlagsicherer Spalt.
• Das Ex-“d“ Anschlussgehäuse besitzt ein 1/2“ NPT und/oder M20x1.5 Gewinde für den Einbau einer nach IEC/EN 60079-1 bescheinigten Ex-“d“ Kabeleinführung.
• Es ist sicherzustellen, dass vor dem Öffnen und bei geöffnetem Deckel des „d“ Gehäuses (z.B. bei Anschluss oder Service- Arbeiten) entweder die Versorgungsleitung spannungsfrei oder keine explosionsfähige Atmosphäre vorhanden ist.
• Der Deckel des „d“ Gehäuses muss im Betrieb bis zum Anschlag hineingedreht sein. Er ist durch eine der Deckelarretierungsschrauben zu sichern.

GB IRL English - Safety instructions

These safety instructions are valid for the Fluid Components, ST51A/75A/75AV flow meter to the EC type approval certificate no FM16ATEX0008X/IECEX FMG 16.0009X (certificate number on the type label) for use in potentially explosive atmospheres in Category II 2 GD.
1) The installation of Ex-instruments must be made by trained personnel.
2) The ST51/75 must be grounded.
3) The terminals and electronics are installed in a flame proof and pressure-tight housing with following notes:
• The gap between the housing and cover is an ignition-proof gap.
• The Ex-"d" housing connection has a 1/2" NPT and/or M20x1.5 cable entry for mounting an Ex-d cable entry certified acc. to IEC/EN 60079-1.
• Make sure that before opening the cover of the Ex"d" housing, the power supply is disconnected or there is no explosive atmosphere present (e.g. during connection or service work).
• During normal operation: The cover of the "d" housing must be screwed in completely and locked by tightening one of the cover locking screws.

GR Υπ_δεί_εις ασφαλείας

Αυτές οι οδηγίες ασφαλείας ισχύουν για τα Ροόμετρα της Fluid Components τύπου ST51A/75A/75AV που φέρουν Πιστοποιητικό Εγκρίσεως Ευρωπαϊκής Ένωσης, με αριθμό πιστοποίησης FM16ATEX0008X/IECEX FMG 16.0009X (ο αριθμός πιστοποίησης βρίσκεται πάνω στην ετικέτα τύπου του οργάνου) για χρήση σε εκρηκτικές ατμόσφαιρες της κατηγορίας II 2 GD.
1) Η εγκατάσταση των οργάνων με αντιεκρηκτική προστασία πρέπει να γίνει από εξειδικευμένο προσωπικό.
2) Το όργανο τύπου ST51/75 πρέπει να είναι γειωμένο.
3) Τα τερματικά ηλεκτρικών συνδέσεων (κλέμες) και τα ηλεκτρονικά κυκλώματα είναι εγκατεστημένα σε περίβλημα αντιεκρηκτικό και αεροστεγές σύμφωνα με τις ακόλουθες παρατηρήσεις:
• Το κενό ανάμεσα στο περίβλημα και στο κάλυμμα είναι τέτοιο που αποτρέπει την διάδοση σπινθήρα.
• Το "Ex-d" αντιεκρηκτικό περίβλημα, έχει ανοίγματα εισόδου καλωδίου με διάμετρο ½" NPT ή/και M20x1.5, κατάλληλα για τοποθέτηση υποδοχής αντιεκρηκτικού καλωδίου πιστοποιημένης κατά IEC/EN 60079-1
• Βεβαιωθείτε ότι πριν το άνοιγμα καλύμματος του του "Ex-d" αντιεκρηκτικού περιβλήματος, η τάση τροφοδοσίας είναι αποσυνδεδεμένη ή ότι δεν υφίσταται στη περιοχή εκρηκτική ατμόσφαιρα (π.χ. κατά τη διάρκεια της σύνδεσης ή εργασιών συντήρησης)
• Κατά τη διάρκεια ομαλής λειτουργίας: Το κάλυμα του "d" καλύμματος αντιεκρηκτικού περιβλήματος πρέπει να είναι εντελώς βιδωμένο και ασφαλισμένο, σφίγγοντας μία από τις βίδες ασφαλείας του περιβλήματος.

FIN Suomi - Turvallisuusohjeet

Nämä turvallisuusohjeet koskevat Fluid Components, ST51A/75A/75AV EY-tyyppitarkastustodistuksen nro. FM16ATEX0008X/IECEX FMG 16.0009X (todistuksen numero näkyy tyyppikilvestä) käytettäessä räjähdysvaarallisissa tiloissa luokassa II 2GD.
1) Ex-laitteet on aina asennettava ammattihenkilökunnan toimesta.
2) ST51/75 on maadoitettava.
3) Syöttöjännitteen kytkemisessä tarvittavat liittimet ja elektroniikka on asennettu koteloon jonka rakenne kestää räjähdyspaineen seuraavin lisäyksin :
• Kotelon ja kannen välissä on räjähdyksen purkausväli.
• Ex-d liitäntäkotelossa on 1/2" NPT ja/tai M20x1.5 kierre IEC/EN 60079-1 mukaisen Ex-d kaapeliläpiviennin asennusta varten
• Kun "d"-kotelon kansi avataan (esim. liitännän tai huollon yhteydessä), on varmistettava, että joko syöttöjohto on jännitteetön tai ympäristössä ei ole räjähtäviä aineita.
• "d" -kotelon kansi on kierrettävä aivan kiinni käytön yhteydessä ja on varmistettava kiertämällä yksi kannen lukitusruuveista kiinni.

(F)(B)(L) Consignes de sécurité

Ces consignes de sécurité sont valables pour le modèle ST51A/75A/75AV de la société Fluid Components (FCI) conforme au certificat d'épreuves de type FM16ATEX0008X/IECEX FMG 16.0009X (numéro du certificat sur l'étiquette signalétique) conçu pour les applications dans lesquelles un matériel de la catégorie II2GD est nécessaire.

1) Seul un personnel spécialisé et qualifié est autorisé à installer le matériel Ex.
2) Les ST51/75 doivent être reliés à la terre.
3) Les bornes pour le branchement de la tension d'alimentation et l'électronique sont logées dans un boîtier à enveloppe antidéflagrante avec les notes suivantes :

• Le volume entre le boîtier et le couvercle est protégé en cas d'amorçage.
• Le boîtier de raccordement Ex-d dispose d'un filetage1/2'' NPT et/ou M20x1.5 pour le montage d'un presse-étoupe Ex-d certifié selon la IEC/EN 60079-1.
• Avant d'ouvrir le couvercle du boîtier « d » et pendant toute la durée où il le restera (pour des travaux de raccordement, d'entretien ou de dépannage par exemple), il faut veiller à ce que la ligne d'alimentation soit hors tension ou à ce qu'il n'y ait pas d'atmosphère explosive.
• Pendant le fonctionnement de l'appareil, le couvercle du boîtier « d » doit être vissé et serré jusqu'en butée. La bonne fixation du couvercle doit être assurée en serrant une des vis d'arrêt du couvercle.

(I) Italiano - Normative di sicurezza

Queste normative di sicurezza si riferiscono ai Fluid Components, ST51A/75A/75AV secondo il certificato CE di prova di omologazione n° FM16ATEX0008X/IECEX FMG 16.0009X (numero del certificato sulla targhetta d'identificazione) sono idonei all'impiego in atmosfere esplosive applicazioni che richiedono apparecchiature elettriche della Categoria II 2 GD.

1) L'installazione di sistemi Ex deve essere eseguita esclusivamente da personale specializzato.
2) I ST51/75 devono essere collegati a terra.
3) I morsetti per il collegamento e l'elettronica sono incorporati in una custodia a prova di esplosione („d") con le seguenti note:

• La sicurezza si ottiene grazie ai cosidetti „interstizi sperimentali massimi", attraverso i quali una eventuale accensione all'interno della custodia non può propagarsi all'esterno oraggiungere altre parti dell'impianto.
• La scatola di collegamento Ex-d ha una filettatura 3/4" e/o 1" NPT per il montaggio di un passacavo omologato Ex-d secondo IEC/EN 60079-1.
• Prima di aprire il coperchio della custodia „d" (per es. durante operazioni di collegamento o di manutenzione) accertarsi che l'apparecchio sia disinserito o che non si trovi in presenza di atmosfere esplosive.
• Avvitare il coperchio della custodia „d" fino all'arresto. Per impedire lo svitamento del coperchio é possibile allentare una delle 2 viti esagonali poste sul corpo della custodia, incastrandola nella sagoma del coperchio.

(NL)(B) Nederlands - Veiligheidsinstructies

Deze veiligheidsinstructies gelden voor de Fluid Components, ST51A/75A/75AV overeenkomstig de EG-typeverklaring nr. FM16ATEX0008X/IECEX FMG 16.0009X (nummer van de verklaring op het typeplaatje) voor gebruik in een explosieve atmosfeer volgens Categorie II 2GD.

1) Installatie van Ex-instrumenten dient altijd te geschieden door geschoold personeel.
2) De ST51/75 moet geaard worden.
3) De aansluitklemmen en de electronika zijn ingebouwd in een drukvaste behuizing met de volgende opmerkingen:

• De schroefdraadspleet tussen de behuizing en de deksel is een ontstekingsdoorslagveilige spleet.
• De Ex-d aansluitbehuizing heeft een 1/2" of een M20x1.5 schroefdraad voor aansluiting van een volgens IEC/EN 60079-1 goedgekeurde Ex- 'd' kabelinvoer.
• Er moet worden veilig gesteld dat vóór het openen bij een geopende deksel van de 'd' behuizing (bijv. bij aansluit- of servicewerkzaamheden) hetzij de voedingsleiding spanningsvrij is, hetzij geen explosieve atmosfeer aanwezig is.
• De deksel van de 'd' behuizing moet tijdens bedrijf tot aan de aanslag erin geschroefd zijn. Hij moet door het eruit draaien van een van de dekselborgschroeven worden geborgd.

Ⓟ Português - Normas de segurança

Estas normas de segurança são válidas para os Fluid Components, ST51A/75A/75AV conforme o certificado de teste de modelo N.º FM16ATEX0008X/IECEX FMG 16.0009X (número do certificado na plaqueta com os dados do equipamento) são apropriados para utilização em atmosferas explosivas categoria II 2 GD.

1) A instalação de equipamentos em zonas sujeitas a explosão deve, por princípio, ser executada por técnicos qualificados.
2) Os ST51/75 Flexmasster precisam ser ligados à terra.
3) Os terminais e a electrónica para a conexão da tensão de alimentação estão instalados num envólucro com protecção contra ignição á prova de sobrepressão com as seguintes notas :

• A fenda entre o envólucro e a tampa deve ser á prova de passagem de centelha.
• O envólucro de conexão Ex-“d“ possui uma rosca 1/2“ NPT e/ou M20x1.5 para a entrada de cabos Ex-“d“ certificado conforme a norma IEC/EN60079-1.
• Deve-se assegurar que, antes de abrir a tampa do armário „d“ (por exemplo, ao efectuar a conexão ou durante trabalhos de manutenção), o cabo de alimentação esteja sem tensão ou que a atmosfera não seja explosíva.
• Durante a operação, a tampa do envólucro „d“ deve estar aparafusada até o encosto. A tampa deve ser bloqueada, por um dos parafusos de fixação.

Ⓔ Español - Instrucciones de seguridad

Estas indicaciones de seguridad son de aplicación para el modelo ST51A/75A/75AV de Fluid Components, según la certificación CE de modelo Nº FM16ATEX0008X/IECEX FMG 16.0009X para aplicaciones en atmósferas potencialmente explosivas según la categoría II 2 GD (el número decertificación se indica sobre la placa informativa del equipo).

1) La instalación de equipos Ex tiene que ser realizada por personal especializado.
2) Los ST51/75 tienen que ser conectados a tierra.
3) Los bornes de conexión y la unidad electrónica están montados dentro de una caja con protección antideflagrante y resistente a presión, considerándose los siguientes puntos:

• La holgura entre la rosca de la tapa y la propia de la caja está diseñada a prueba contra ignición.
• La caja tiene conexiones eléctricas para entrada de cables con rosca 1/2” NPTy/o M20x1.5, donde deberán conectarse prensaestopas certificados Exd según IEC/EN60079-1.
• Antes de la apertura de la tapa de la caja "Exd“ (p. ej. durante los trabajos de conexionado o de puesta en marcha) hay que asegurar que el equipo se halle sin tensión o que no exista presencia de atmósfera explosiva.
• Durante el funcionamiento normal: la tapa de la caja antideflagrante tiene que estar cerrada, roscada hasta el tope, debiendose asegurar apretando los tornillos de bloqueo.

Ⓢ Svenska - Säkerhetsanvisningar

Säkerhetsanvisningarna gäller för Fluid Components, Flödesmätare typ ST51A/75A/75AV enligt EG-typkontrollintyg nr FM16ATEX0008X/IECEX FMG 16.0009X (intygsnumret återfinns på typskylten) är lämpad för användning i explosiv gasblandning i kategori II 2 GD.

1) Installation av Ex- klassade instrument måste alltid utföras av fackpersonal.
2) ST51/75 måste jordas.
3) Anslutningsklämmorna och elektroniken är inbyggda i en explosions och trycktät kapsling med följande kommentar:

• Spalten mellan kapslingen och lockets gänga är flamsäker.
• Ex-d kapslingen har en 1/2“ NPT och / eller M20x1.5 gänga för montering av en IEC/EN 60079-1 typkontrollerad Ex- „d“ kabel förskruvning
• När Ex- „d“-kapslingens lock är öppet (t.ex. vid inkoppling - eller servicearbeten) ska man se till att enheten är spänningslös eller att ingen explosiv gasblandning förekommer.
• Under drift måste Ex - d“-kapslingens lock vara iskruvad till anslaget. För att säkra locket skruvar man i en av lockets insex låsskruvar .

APPENDIX D CUSTOMER SERVICE

Customer Service/Technical Support

FCI provides full in-house technical support. Additional technical representation is also provided by FCI field representatives. Before contacting a field or in-house representative, please perform the troubleshooting techniques outlined in this document.

By Mail

Fluid Components International LLC
1755 La Costa Meadows Dr.
San Marcos, CA 92078-5115 USA
Attn: Customer Service Department

By Phone

Contact the area FCI regional representative. If a field representative is unable to be contacted or if a situation is unable to be resolved, contact the FCI Customer Service Department toll free at 1 (800) 854-1993.

By Fax

To describe problems in a graphical or pictorial manner, send a fax including a phone or fax number to the regional representative. Again, FCI is available by facsimile if all possibilities have been exhausted with the authorized factory representative. Our fax number is 1 (760) 736-6250; it is available 7 days a week, 24 hours a day.

By Email

FCI Customer Service can be contacted by email at: techsupport@fluidcomponents.com.

Describe the problem in detail making sure a telephone number and best time to be contacted is stated in the email.

International Support

For product information or product support outside the contiguous United States, Alaska, or Hawaii, contact your country's FCI International Representative or the one nearest to you.

After Hours Support

For product information visit FCI at www.fluidcomponents.com. For product support call 1 (800) 854-1993 and follow the prerecorded instructions.

Point of Contact

The point of contact for service, or return of equipment to FCI is your authorized FCI sales/service office. To locate the office nearest you, please go to www.fluidcomponents.com.

Warranty Repairs or Returns

FCI prepays ground transportation charges for return of freight to the customer's door. FCI reserves the right to return equipment by the carrier of our choice.

International freight, handling charges, duty/entry fees for return of equipment are paid by the customer.

Non-Warranty Repairs or Returns

FCI returns repaired equipment to the customer either collect or prepaid and adds freight charges to the customer invoice.

Extended Warranty

An extended warranty is available. Please contact the factory for information.

Return to Stock Equipment

The customer is responsible for all shipping and freight charges for equipment that is returned to FCI stock from the customer site. These items will not be credited to the customer's account until all freight charges are cleared, along with applicable return to stock charges, from the credit invoice. (Exceptions are made for duplicate shipments made by FCI.)

If any repair or return equipment is received at FCI, freight collect, without prior factory consent, FCI bills the sender for these charges.

Field Service Procedures

Contact an FCI field representative to request field service.

A field service technician is dispatched to the site from either the FCI factory or one of the FCI representative offices. After the work is complete, the technician completes a preliminary field service report at the customer site and leaves a copy with the customer.

Following the service call, the technician completes a formal, detailed service report. The formal report is mailed to the customer after the technician's return to the factory or office.

Field Service Rates

All field service calls are billed at the prevailing rates as listed in the FCI Price Book unless previous arrangements have been made with the FCI Customer Service Manager.

Customers are charged for all travel expenses including airfare, auto rental, meals and lodging. In addition, the customer shall pay all costs of transporting parts, tools or goods to and from the job site. Invoicing travel time, field service work and other expenses will be performed by FCI's Accounting Department.

FLUID COMPONENTS INTERNATIONAL LLC
1755 La Costa Meadows Drive, San Marcos, CA 92078-5115 USA
760-744-6950 / 800-854-1993 / Fax: 760-736-6250
Web Site: www.fluidcomponents.com
E-mail: techsupport@fluidcomponents.com

RA #_____

Return Authorization Request

1. **Return Customer Information**

Returning Company's Name: _____ Phone# _____

Return Contact Name: _____ Fax # _____

Email Address: _____

2. **Return Address**

Bill To: _____ Ship To: _____

_____ _____

_____ _____

_____ _____

3. **Mandatory End User Information**

Contact: _____ Company: _____ Country: _____

4. **Return Product Information**

Model No: _____ Serial No(s): _____

Failure Symptoms *(Detailed Description Required)*: _____

_____

What Trouble Shooting Was Done Via Phone or Field Visit by FCI: _____

_____

FCI Factory Technical Service Contact: _____

5. **Reason For Return** ❑ Sensor Element ❑ Electronics ❑ As Found Testing ❑ Credit
❑ Recalibrate (New Data) ❑ Recalibrate (Most Recent Data) ❑ Other

(Note: A new Application Data Sheet (ADS) must be submitted for all recalibrations and re-certifications)

6. **Payment Via** ❑ Faxed Purchase Order ❑ VISA ❑ MasterCard

(Note: A priced quotation is provided for all Non-Warranty repairs after equipment has been evaluated. All Non-Warranty repairs are subject to a minimum evaluation charge of $250.00)

Factory Return Shipping Address:

Fluid Components International LLC
1755 La Costa Meadows Drive
San Marcos, CA 92078-5115
Attn: Repair Department
RA #_____

FCI Document No. 05CS000004D [U]

FLUID COMPONENTS INTERNATIONAL LLC

The following Return Authorization Request form and Decontamination Statement ***MUST be completed, signed and faxed back to FCI before*** a Return Authorization Number will be issued. The signed Decontamination Statement and applicable MSDS Sheets **must be included with the shipment**. FCI will either fax, email or telephone you with the Return Authorization Number upon receipt of the signed forms.

Packing Procedures

1. **Electronics** should be wrapped in an **anti-static** or **static-resistant** bag, then wrapped in protective bubble wrap and surrounded with appropriate dunnage* in a box. Instruments weighing **more than 50 lbs., or extending more than four feet**, should be secured in wooden crates by bolting the assemblies in place.
2. **The sensor head must be protected** with pvc tubing, or retracted the full length of the probe, locked and secured into the Packing Gland Assembly (cap screws tightened down).
3. FCI can supply crates for a nominal fee.
4. No more than **four (4)** small units packaged in each carton.
5. **FCI will not be held liable for damage caused during shipping.**
6. To ensure immediate processing **mark** the RA number on the outside of the box. Items without an RA number marked on the box or crate may be delayed.
7. Freight **must be "PrePaid"** to FCI receiving door.

* Approriate dunnage as defined by UPS, will protect package contents from a drop of 3 feet.

*** Decontamination Statement *** This Section Must Be Completed ***

Exposure to hazardous materials is regulated by Federal, State, County and City laws and regulations. These laws provide FCI's employees with the "Right to Know" the hazardous or toxic materials or substances in which they may come in contact while handling returned products. Consequently, FCI's employees must have access to data regarding the hazardous or toxic materials or substances the equipment has been exposed to while in a customer's possession. Prior to returning the instrument for evaluation/repair, FCI requires thorough compliance with these instructions. The signer of the Certificate must be either a knowledgeable Engineer, Safety Manager, Industrial Hygienist or of similar knowledge or training and responsible for the safe handling of the material to which the unit has been exposed. **Returns without a legitimate Certification of Decontamination, and/or MSDS when required, are unacceptable and shall be returned at the customer's expense and risk.** Properly executed Certifications of Decontamination must be provided before a repair authorization (RA) number will be issued.

Certification Of Decontamination

I certify that the returned item(s) has(have) been thoroughly and completely cleaned. If the returned item(s) has(have) been exposed to hazardous or toxic materials or substances, even though it (they) has (have) been thoroughly cleaned and decontaminated, the undersigned attests that the attached Material Data Safety Sheet(s) (MSDS) covers said materials or substances completely. Furthermore, I understand that this Certificate, and providing the MSDS, shall not waive our responsibility to provide a neutralized, decontaminated, and clean product for evaluation/repair at FCI. Cleanliness of a returned item or acceptability of the MSDS shall be at the sole discretion of FCI. **Any item returned which does not comply with this certification shall be returned to your location Freight Collect and at your risk.**

This certification must be signed by knowledgeable personnel responsible for maintaining or managing the safety program at your facility.

Process Flow Media _____

Product was or may have been exposed to the following substances: _____

Print Name _____

Authorized Signature _____ Date _____

Company Title _____

Visit FCI on the Worldwide Web: www.fluidcomponents.com
1755 La Costa Meadows Drive, San Marcos, California 92078-5115 USA ‡ Phone: 760-744-6950 ‡ 800-854-1993 ‡ Fax: 760-736-6250

FCI Document No. 05CS000004D [U]

WARRANTIES

Goods furnished by the Seller are to be within the limits and of the sizes published by the Seller and subject to the Seller's standard tolerances for variations. All items made by the Seller are inspected before shipment, and should any of said items prove defective due to faults in manufacture or performance under Seller approved applications, or fail to meet the written specifications accepted by the Seller, they will be replaced or repaired by Seller at no charge to Buyer provided return or notice of rejection of such material is made within a reasonable period but in no event longer than two (2) years from date of shipment to Buyer, and provided further, that an examination by Seller discloses to Seller's reasonable satisfaction that the defect is covered by this warranty and that the Buyer has not returned the equipment in a damaged condition due to Buyer's or Buyer's employees', agents', or representatives' negligence and Buyer has not tampered, modified, redesigned, misapplied, abused, or misused the goods as to cause the goods to fail. In addition, this warranty shall not cover damage caused by Buyer's exposure of the goods to corrosive or abrasive environments. Moreover, Seller shall in no event be responsible for (1) the cost or repair of any work done by Buyer on material furnished hereunder (unless specifically authorized in writing in each instance by Seller), (2) the cost or repair of any modifications added by a Distributor or a third party, (3) any consequential or incidental damages, losses, or expenses in connection with or by reason of the use of or inability to use goods purchased for any purpose, and Seller's liability shall be specifically limited to free replacement, or refund of the purchase price, at Seller's option, provided return or rejection of the goods is made consistent with this paragraph, and the Seller shall in no event be liable for transportation, installation, adjustment, loss of good will or profits, or other expenses which may arise in connection with such returned goods, or (4) the design of products or their suitability for the purpose for which they are intended or used. Should the Buyer receive defective goods as defined by this paragraph, the Buyer shall notify the Seller immediately, stating full particulars in support of his claim, and should the Seller agree to a return of the goods, the Buyer shall follow Seller's packaging and transportation directions explicitly. In no case are the goods to be returned without first obtaining a return authorization from the Seller. Any repair or replacement shall be at Seller's factory, unless otherwise directed, and shall be returned to Seller transportation prepaid by Buyer. If the returned goods shall prove defective under this clause they will be replaced or repaired by Seller at no charge to Buyer provided the return or rejection of such material is made within a reasonable period, but in no event longer than (2) years from the date of shipment of the returned goods or the unexpired terms of the original warranty period whichever is later. If the goods prove to be defective under this paragraph, the Buyer shall remove the goods immediately from the process and prepare the goods for shipment to Seller. Continued use or operation of defective goods is not warranted by Seller and damage occurring due to continued use or operation shall be for Buyer's account. Any description of the goods contained in this offer is for the sole purpose of identifying them, and any such description is not part of the basis of the bargain, and does not constitute a warranty that the goods will conform to that description. The use of any sample or model in connection with this offer is for illustrative purposes only, is not part of the basis of the bargain, and is not to be construed as a warranty that the goods will conform to the sample or model. No affirmation of that fact or promise made by the Seller, whether or not in this offer, will constitute a warranty that the goods will conform to the affirmation or promise. THIS WARRANTY IS EXPRESSLY IN LIEU OF ANY AND ALL OTHER EXPRESS OR IMPLIED WARRANTIES WITH RESPECT TO THE GOODS OR THEIR INSTALLATION, USE, OPERATION, REPLACEMENT OR REPAIR, INCLUDING ANY IMPLIED WARRANTY OF MERCHANTABILITY OR FITNESS OF PURPOSE; AND THE GOODS ARE BEING PURCHASED BY BUYER "AS IS". SELLER WILL NOT BE LIABLE BY VIRTUE OF THIS WARRANTY OR OTHERWISE FOR ANY SPECIAL, INCIDENTAL OR CONSEQUENTIAL LOSS OR DAMAGE RESULTING FROM THE USE OR LOSS OF USE OF THE GOODS.

Flow & Level Instrumentation
Solutions for Industrial Processes

FCI's Complete Customer Commitment. Worldwide
ISO 9001 and AS9100 Certified

Visit FCI on the Worldwide Web: www.fluidcomponents.com

FCI World Headquarters

1755 La Costa Meadows Drive | San Marcos, California 92078 USA | Phone: 760-744-6950 Toll Free (US): 800-854-1993 Fax: 760-736-6250

FCI Europe

Persephonestraat 3-01 | 5047 TT Tilburg, The Netherlands | Phone: 31-13-5159989 Fax: 31-13-5799036

FCI Measurement and Control Technology (Beijing) Co., LTD | www.fluidcomponents.cn

Room 107, Xianfeng Building II, No.7 Kaituo Road, Shangdi IT Industry Base, Haidian District | Beijing 100085, P. R. China

Phone: 86-10-82782381 Fax: 86-10-58851152

Notice of Proprietary Rights

This document contains confidential technical data, including trade secrets and proprietary information which is the property of Fluid Components International LLC (FCI).Disclosure of this data to you is expressly conditioned upon your assent that its use is limited to use within your company only (and does not include manufacture or processing uses). Any other use is strictly prohibited without the prior written consent of FCI.

© Copyright 2016 by Fluid Components International LLC. All rights reserved. FCI is a registered trademark of Fluid Components International LLC. Information subject to change without notice.